ORDER NO. ACED9505095

Service Manual

AUTOMOTIVE CONSUMER ELECTRONICS

Supplement

Digital Control Receiver / Cassette Player

CQ-D50VEG CQ-D55LEE CQ-D55VEG

Correction of Parts Number

- This supplementary service manual to correct Replacement parts list from original mechanism parts list.

Please file and use this manual together with the Service Manual as shown above table.

■ REPLACEMENT PARTS LIST

Ref. No.	Part No.		Part Name & Description	Pcs set	Remarks
	Wrong	➡ Correct			
CN1 (3-B)	EMCQRE18B38V	EMCQRE58B40V	20P Connector	1	
CN2 (3-C)	EMCQRH58B40V	EMCQRE18B38V	20P Connector	1	

⚠ WARNING

This service information is designed for experienced repair technicians only and is not designed for use by the general public.
It does not contain warnings or cautions to advise non-technical individuals of potential dangers in attempting to service a product.
Products powered by electricity should be serviced or repaired only by experienced professional technicians. Any attempt to service or repair the product or products dealt with in this service information by anyone else could result in serious injury or death.

Panasonic

©1995 Matsushita Communication Industrial Co., Ltd.
All rights reserved. Unauthorized copying and distribution is a violation of law.

E-732
Prtinted in Japan Ⓝ
1995.5

ORDER NO. APD9109007

Service Manual

AUTO PRODUCTS

CQ-D50VEG/D55VEG

Digital Control Receiver/Cassette Player
Digitaler Cassettenspieler Receiver

CD Changer Control Receiver/Cassette Player
CD-Wechsler/Steuerreceiver/Cassettenspieler

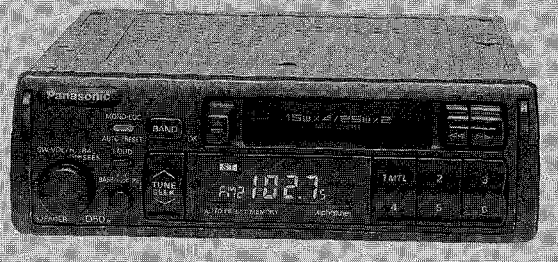

▲CQ-D50VEG

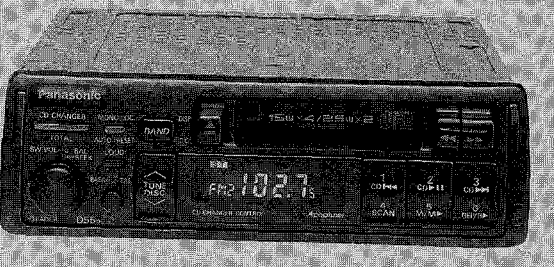

▲CQ-D55VEG

■ FEATURES

- PLL (Phase Locked Loop) Synthesized tuning.
- 24-Stations preset (6-AM(MW/LW), 6-FM1, 6-FM2 and 6-VF)
- Seek tuning function
- Multi function LCD display
- Bass control and treble control function, Loudness function, Fader control function.
- Traffic-information broadcast station SK DK (VF) reception.
- With theft protection unit by "Quick Release bracket"

■ MERKMALE

- PLL-(Phase Locked Loop) Synthesizer-Abstimmung
- 24 Festsender (6 für MW/LW, 6 für UKW1, 6 für UKW2 und 6 für VF)
- Suchlauf-Abstimmfunktion
- Multifunktions- LCD- Display
- Baß-und Höhenreglerfunktion, Funktion für gehörrichtige Lautstärkekontur, Faderregler funktion
- Empfang von Verkehrsfunkstationen SK DK (VF)
- Diebstahlsicherung mit "Schnellwechselhalterung"

Panasonic

●CONTENTS/■INHALTSVERZEICHNIS

		Page
● DIMENSIONS, ■ ABMESSUNGEN		1
● Specifications		2
■ Technische Daten		3
● BLOCK DIAGRAM	MODEL CQ-D50VEG	4
	MODEL CQ-D55VEG	5
● SCHEMATIC DIAGRAM	MODEL CQ-D50VEG	6, 7
	MODEL CQ-D55VEG	10
● WIRING DIAGRAM	MODEL CQ-D50VEG	8, 9
	MODEL CQ-D55VEG	11
● ALIGNMENT INSTRUCTIONS		12
■ ABGLEICH ANLEITUNG		13
● OPERATION OF LSI	(CQ-D50VEG)	14
	(CQ-D55VEG)	15
● PACKAGE AND IC BLOCK DIAGRAM		16
● DISASSEMBLY INSTRUCTIONS		20
● EXPLODED VIEW (UNIT)	MODEL CQ-D50VEG	22
	MODEL CQ-D55VEG	30
● EXPLODED VIEW (DECK) MODELS CQ-D50VEG/D55VEG		38
● REPLACEMENT PARTS LIST	MODEL CQ-D50VEG	21, 23 to 28
	MODEL CQ-D55VEG	29, 31 to 36
	DECK	37

● The following table describes the difference between two models.

Model	Operating Controls	
	Metal Tape Selector	CD Changer Controls Function
CQ-D50VEG	Yes	No
CQ-D55VEG	No	Yes

■ Die folgende Tabelle beschreibt die Unterschiede zwischen den beiden Modellen.

Modell	Bedienungselemente	
	Reineisenband-Wahlschalter	CD Wechsler-Steuerfunktion
CQ-D50VEG	Ja	Nein
CQ-D55VEG	Nein	Ja

● DIMENSIONS/■ ABMESSUNGEN

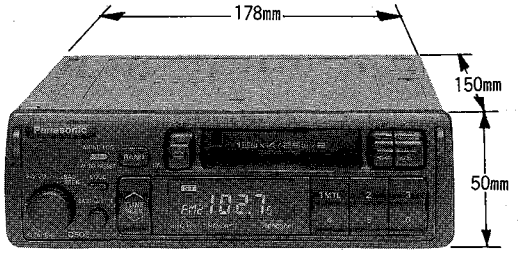

▲CQ-D50VEG

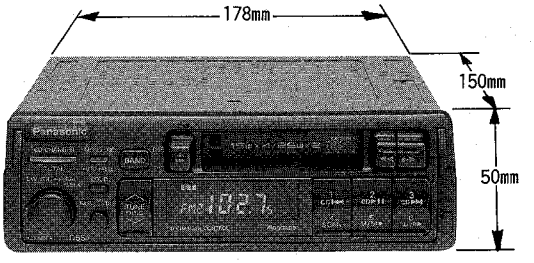

▲CQ-D55VEG

Specifications

General

Power Supply	: DC 12V (11V - 16V), Test Voltage 14.4V, Negative Ground
Tone Controls	: Bass; ± 10dB at 100Hz Treble; ± 10dB at 10kHz
Loudness Control	: + 8dB at 100Hz, + 6dB at 10kHz
Current Consumption	: Less than 2.0A (Tape mode, 0.5W 4-Speaker)
Maximum Power Output	: 2×25W, 4×15W (at 4Ω)
Power Output	: 2×15W, 4×8W (DIN45 324,at 4Ω)
Speaker Impedance	: 4 - 8Ω
Dimensions (Main unit)	: 178(W) × 50(H) × 150(D) mm
(Bracket)	: 182(W) × 53(H) × 155(D) mm
Weight (Main unit)	: 1.45kg
(Bracket)	: 0.35kg

FM Stereo Radio

Frequency Range	: 87.5 - 108MHz
Usable Sensitivity	: 6dB/μV(S/N 30dB)
Stereo Separation	: 35 dB(at 1kHz)

MW Radio

Frequency Range	: 531 - 1,602kHz
Usable Sensitivity	: 28dB/μV (S/N 20dB)

LW Radio

Frequency Range	: 153 - 279kHz
Usable Sensitivity	: 32dB/μV (S/N 20dB)

Cassette Player

Reproduction System	: 4-track, 2-program stereo
Tape Speed	: 4.75cm/sec.
FF/Rewind Time	: Less than 100sec.
Frequency Response	: 35 - 14,000Hz ± 3dB (Normal) 35 - 17,000Hz ± 3dB (Metal)
Wow and Flutter	: 0.12% (WRMS)
Signal to Noise Ratio	: 52dB

Note:
Specifications and the design are subject to possible modification without notice due to improvements.

WARNING !

Lithium batteries. Explosion danger.
Change of batteries must only be done by qualified personnel and as described in the service manual.
Furthermore, that the batteries must only be changed with batteries of the same manufacture and type.

Technische Daten

Allgemeines

Spannungsversorgung	: 12V (11V - 16V) Gleichspannung, Testspannung 14,4V, negative Erdung
Klangregelung	: Bässe; ± 10dB bei 100Hz Höhen; ± 10dB bei 10kHz
Gehörrichtige Frequenzgangkorrektur	: + 8dB bei 100Hz, + 6dB bei 10kHz
Leistungsaufnahme	: Weniger als 2,0A (Cassettenwiedergabe, 0,5W, 4 Lautsprecher)
Höchstausgangsleistung	: 2 × 25W 4 × 15W (bei 4Ω)
Ausgang	: 2 × 15W 4 × 8W (DIN45 324 bei 4Ω)
Lautsprecherimpedanz	: 4Ω - 8 Ω
Abmessungen (Haupteinheit)	: 178(B) × 50(H) × 150(T) mm
(Halterbügel)	: 182(B) × 53(H) × 155(T) mm
Gewicht (Haupteinheit)	: 1,45kg
(Halterbügel)	: 0,35kg

UKW-Stereo-Tunerteil

Frequenzbereich	: 87,5 - 108MHz
Anwendbare Empfindlichkeit	: 6dB/μV (Signal/Rauschabstand 30dB)
Stereoabscheidung	: 35dB (bei 1kHz)

MW-Tunerteil

Frequenzbereich	: 531 - 1.602kHz
Anwendbare Empfindlichkeit	: 28dB/μV (Signal/Rauschabstand 20dB)

LW-Tunerteil

Frequenzbereich	: 153 - 279kHz
Anwendbare Empfindlichkeit	: 32dB/μV (Signal/Rauschabstand 20dB)

Cassettenspieler

Wiedergabe-System	: 4 Spuren, 2-Kanal-Stereo
Bandgeschwindigkeit	: 4,75cm/sek.
Schnellvorlauf-/Rücklaufzeit	: Weniger als 100sek.
Frequenzgang	: 35 - 14.000Hz ±3dB (Normale Bänd) 35 - 17.000Hz ±3dB (Reineisenband)
Gleichlaufschwankungen	: 0,12% (WRMS)
Signal/Rauschabstand	: 52dB

Hinweis:
Bei Konstruktion und technischen Daten Änderungen vorbehalten.

ADVARSEL !

Lithiumbatterier. Eksplosionsfare.
Udskiftning må kun foretages af en sagkyndig og som beskrevet i servicemanualen.
Batterierne kun må udskiftes med batterier af samme fabrikat og type.

 CQ-D50VEG/D55VEG

BLOCK DIAGRAM MODEL CQ-D50VEG

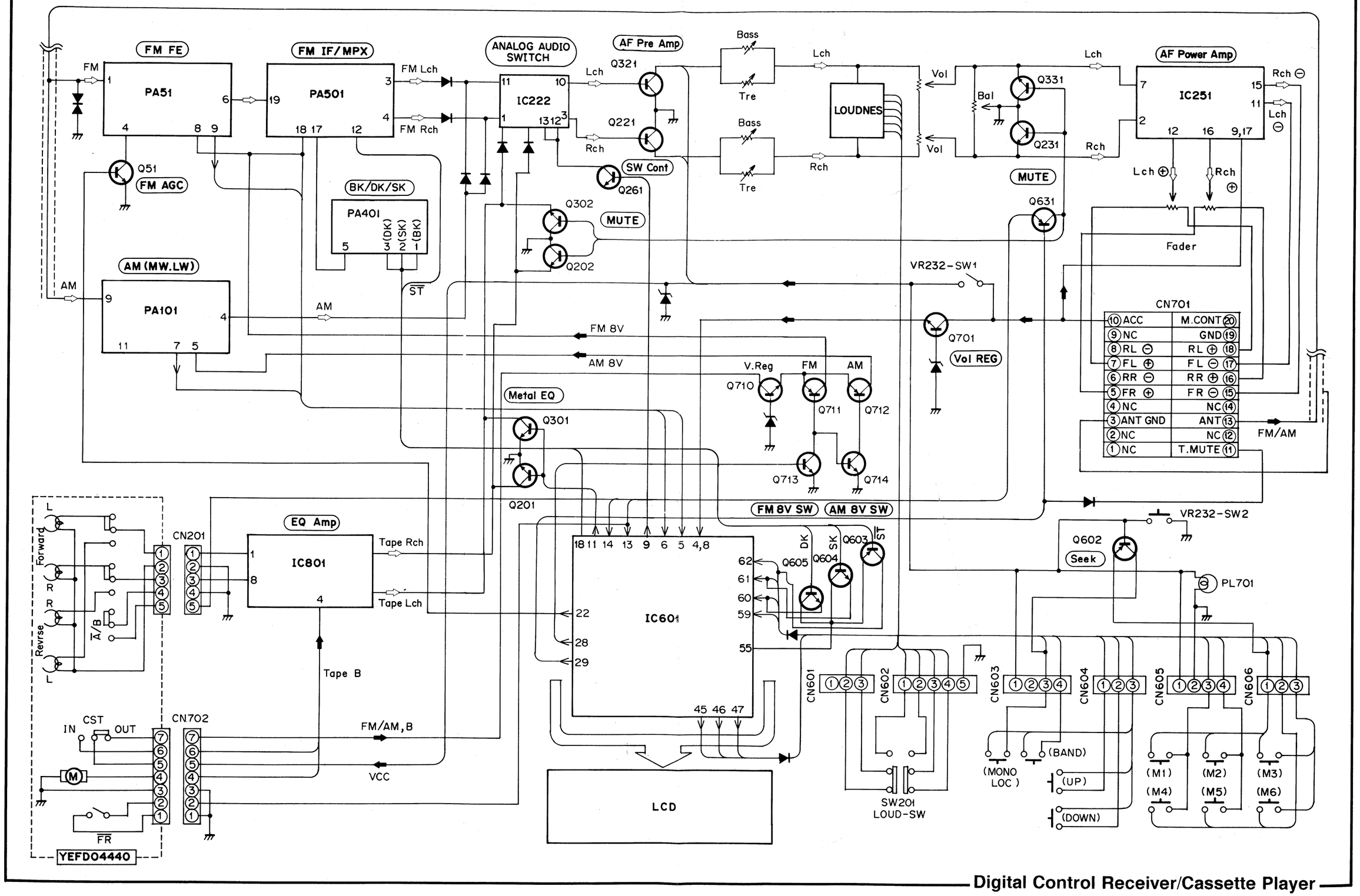

Digital Control Receiver/Cassette Player

BLOCK DIAGRAM MODEL CQ-D55VEG

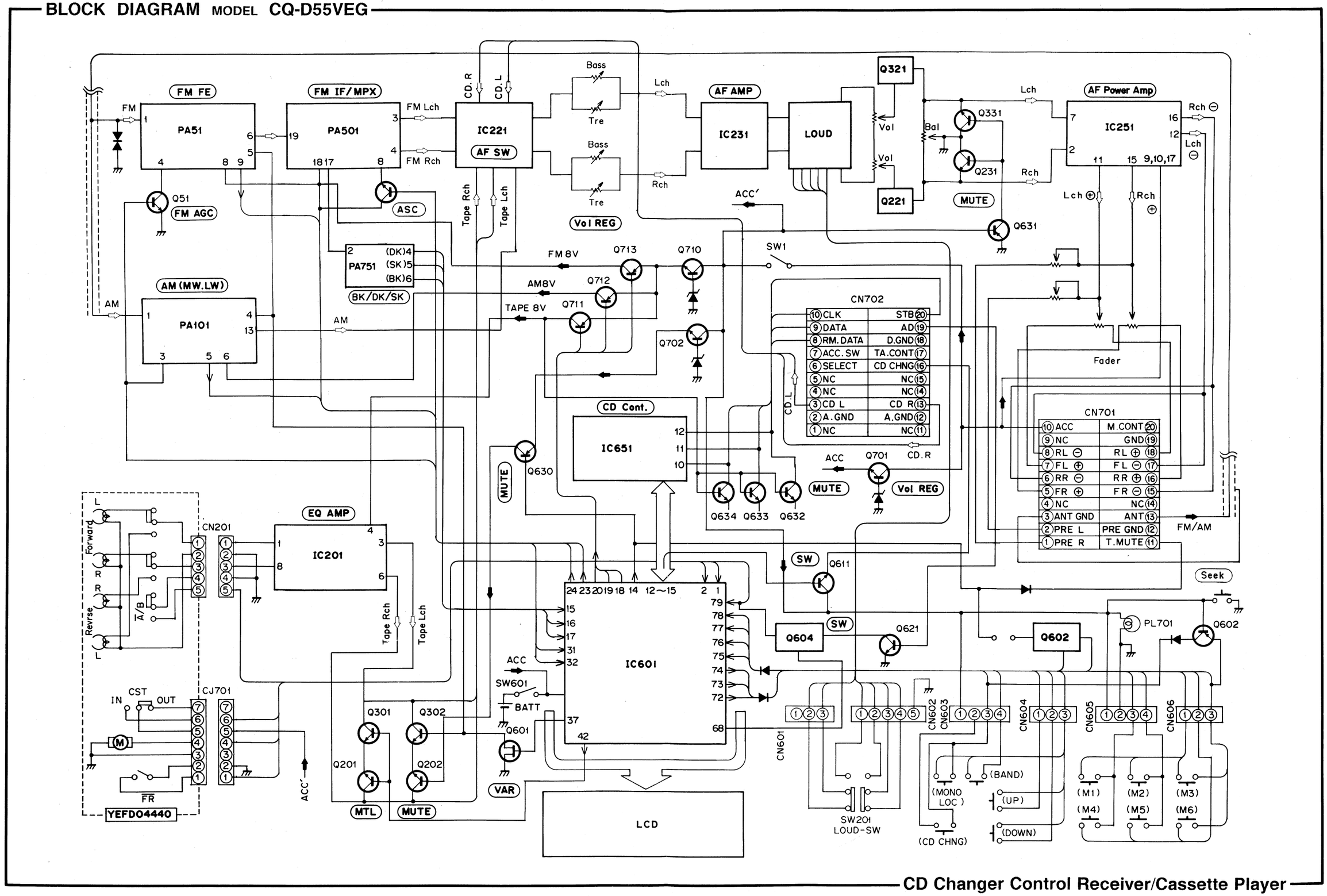

CD Changer Control Receiver/Cassette Player

SCHEMATIC DIAGRAM MODEL CQ-D50VEG

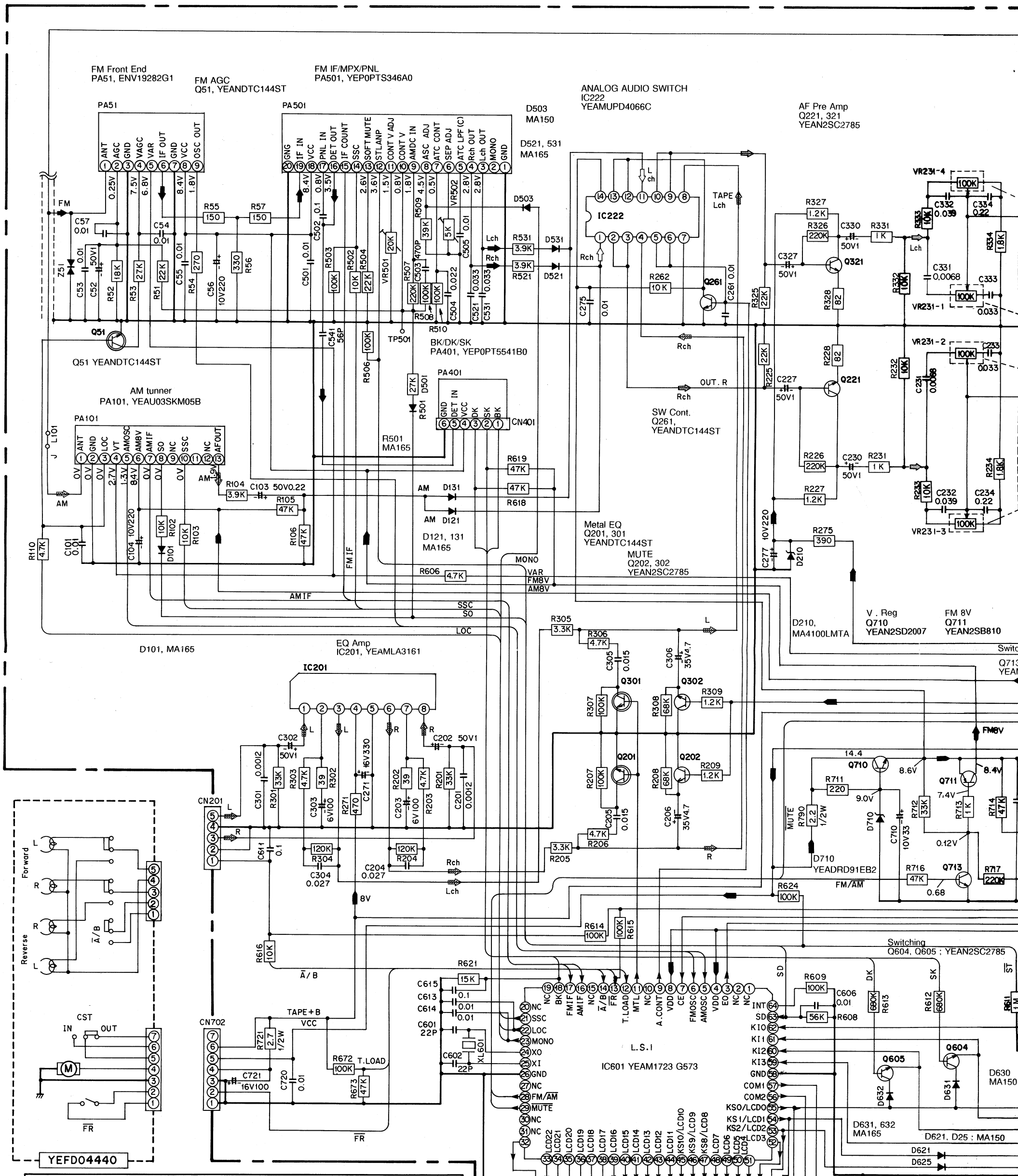

NOTES:
- Voltage measurem
controls set for no
- Exact value dete
latest at the time
value as original p

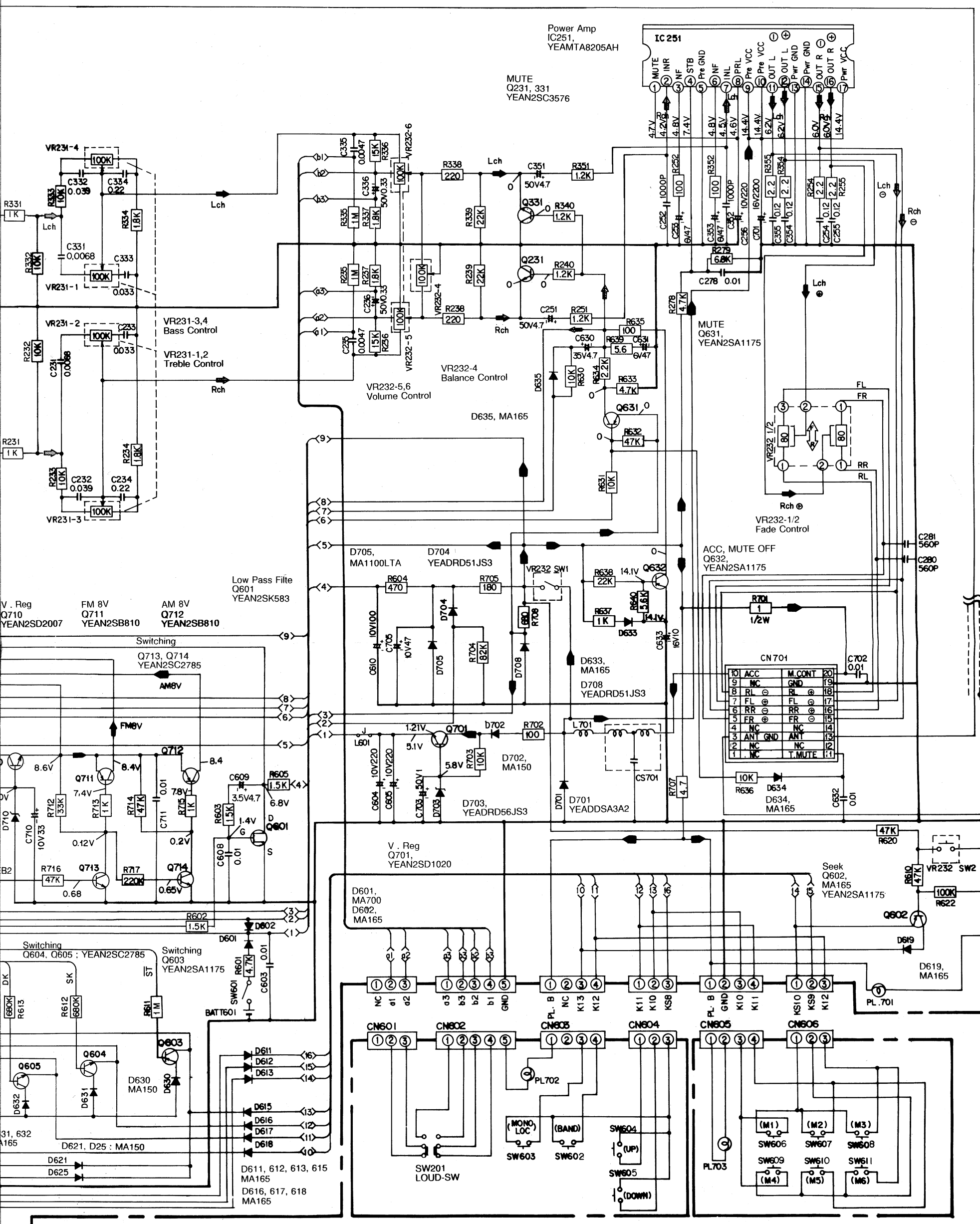

NOTES:

- Voltage measurements are with respect to ground, with a digital voltmeter, with controls set for normal operation, no signal applied, 14.4V DC power supply.
- Exact value determined by production process. This schematic diagram is the latest at the time of printing and subject to change without notice. Replace same value as original parts.

- Symbols detail:
  - FM Radio
  - AM Radio
  - Rch ..... Tape Rch
  - Lch ..... Tape Lch
  - Rch ..... FM/AM Radio, Rch
  - Lch ..... FM/AM Radio, Lch
  - Rch ..... Audio (FM/AM, Tape) Rch
  - Lch ..... Audio (FM/AM, Tape) Lch
  - +B Line

WIRING DIAGRAM MODEL CQ-D50VEG(PA401)

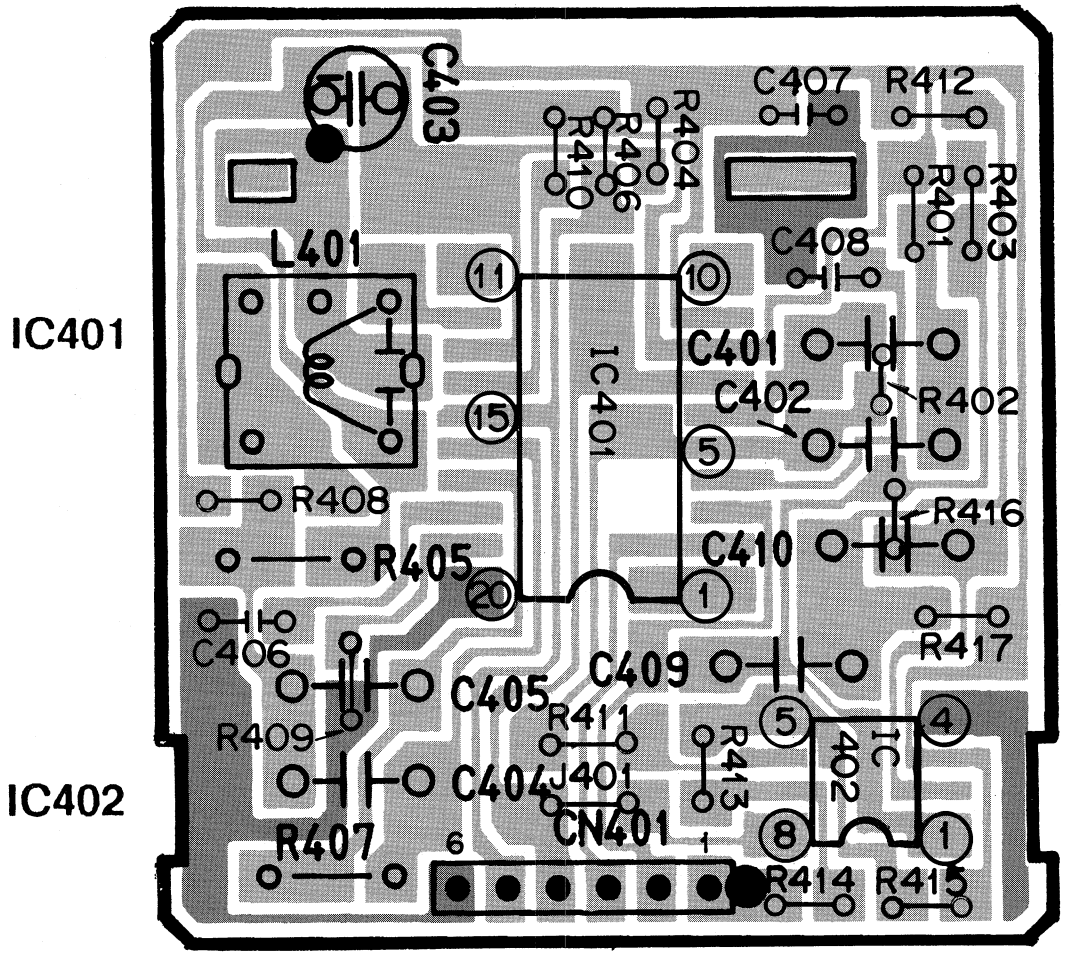

[E-5541]

To
E-6434A
CN401

SCHEMATIC DIAGRAM MODEL CQ-D50VEG(PA401)

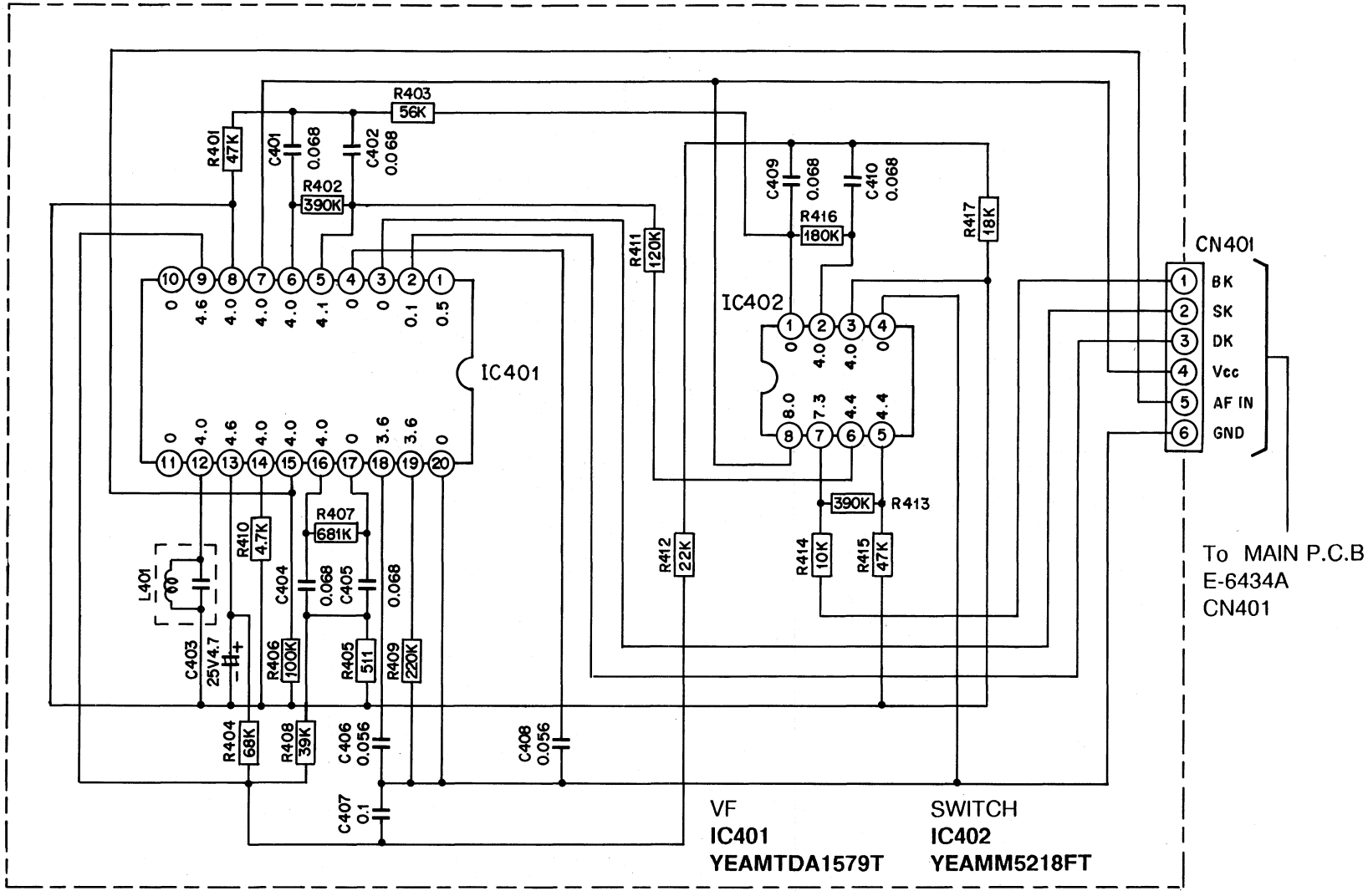

[E-5541]

Digital Control Receiver/Cassette Player

WIRING DIAGRAM MODEL CQ-D50VEG

PA51	
1	-
2	0.25V
3	0V
4	7.5V
5	6.8V
6	-
7	0V
8	8.4V
9	1.8V

PA501	
1	0V
2	-
3	2.8V
4	2.8V
5	-
6	-
7	0.5V
8	4.5V
9	1.8V
10	0.8V
11	1.5V
12	3.6V
13	2.6V
14	-
15	-
16	3.5V
17	0.8V
18	8.4V
19	-
20	-

PA101	
1	0V
2	0V
3	0V
4	2.7V
5	1.3V
6	8.4V
7	0V
8	0V
9	-
10	0V
11	-
12	-
13	1.9V

IC201	
1	0.74V
2	0.75V
3	3.4V
4	11.4V
5	0V
6	3.4V
7	0.75V
8	0.75V

IC251	
1	4.6V
2	4.2V
3	4.8V
4	7.4V
5	0V
6	4.8V
7	4.5V
8	4.6V
9	14.4V
10	4.4V
11	6.2V
12	6.2V
13	0V
14	0V
15	6.0V
16	6.0V
17	14.4V

Q51	
B	0V
C	6.0V
E	0V

Q101	
B	0V
C	0V
E	0V

Q221	
B	0.95V
C	4.6V
E	0.4V

Q321	
B	1.0V
C	4.6V
E	0.4V

Q202	
B	0V
C	0V
E	0V

Q302	
B	0V
C	0V
E	0V

Q231	
B	0V
C	0V
E	0V

Q331	
B	0V
C	0V
E	0V

Q631	
B	0V
C	0V
E	5.3V

Q632	
B	14.1V
C	0V
E	14.1V

Q710	
B	9.0V
C	14.4V
E	8.6V

Q711	
B	7.4V
C	8.4V
E	8.6V

Q712	
B	7.8V
C	8.4V
E	8.6V

Q713	
B	0.68V
C	0.12V
E	8.6V

Q714	
B	0.65V
C	0.2V
E	0V

Q601	
B	6.8V
C	1.4V
E	0V

Q603	
B	2.6V
C	0V
E	2.3V

Q701	
B	5.8V
C	12.1V
E	5.1V

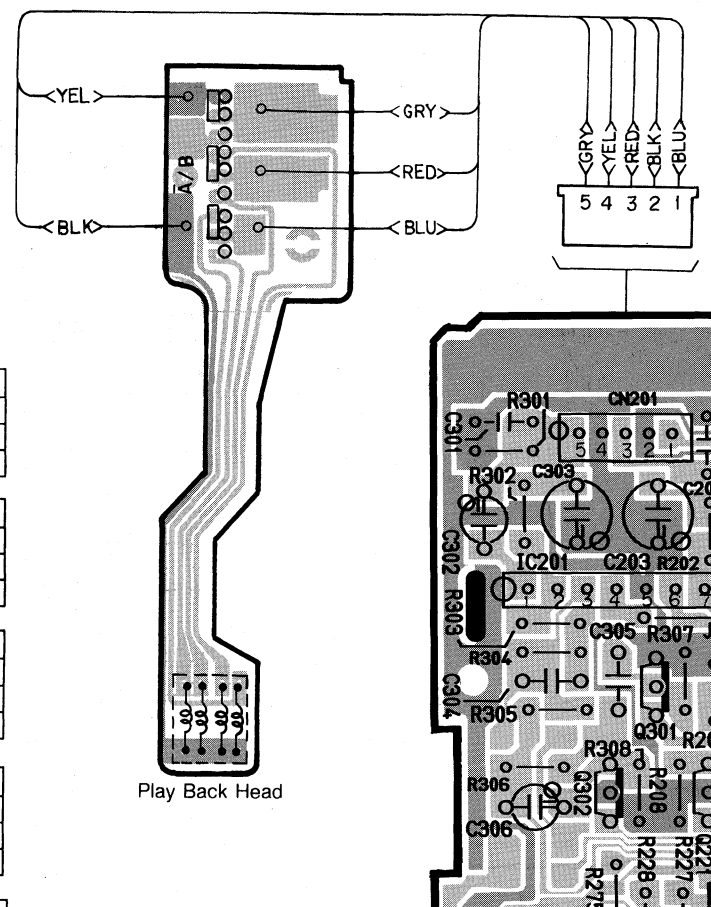

Play Back Head

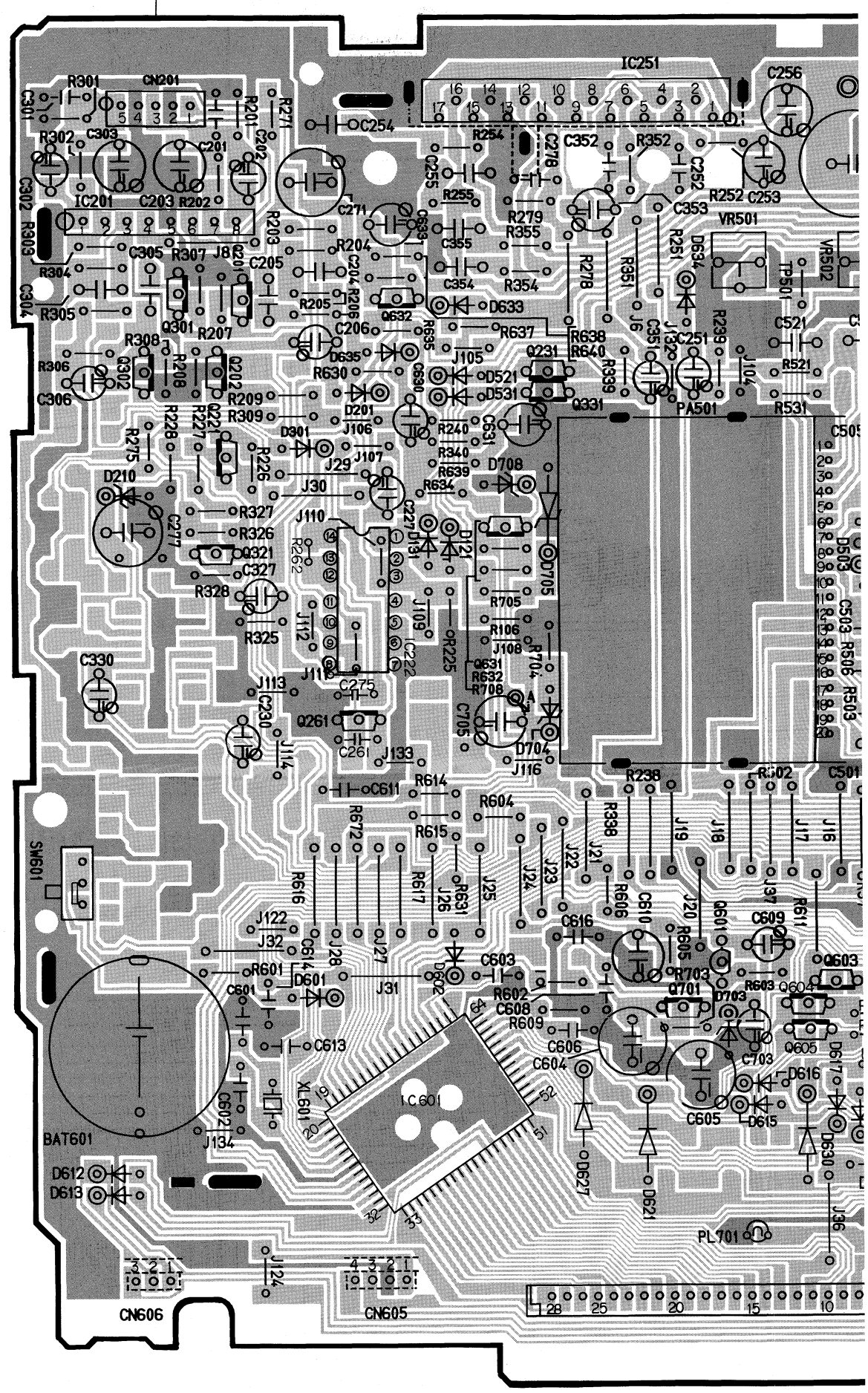

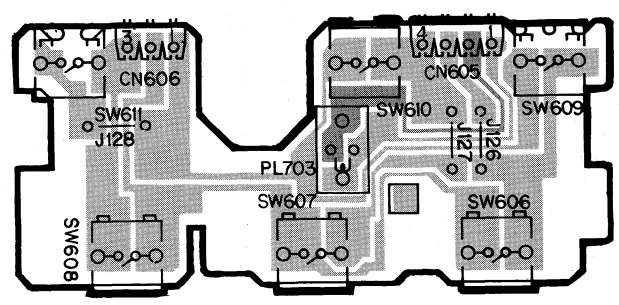

[↑E-7405Ac, Component Side View]

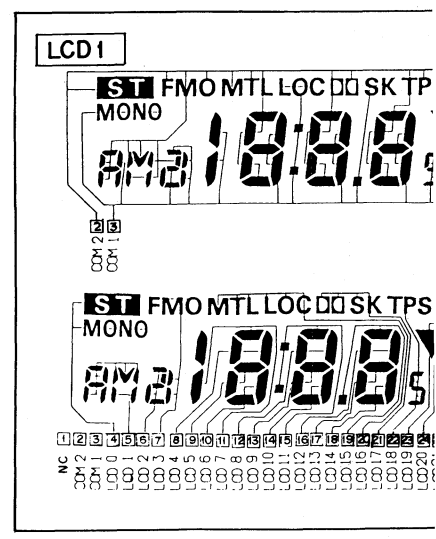

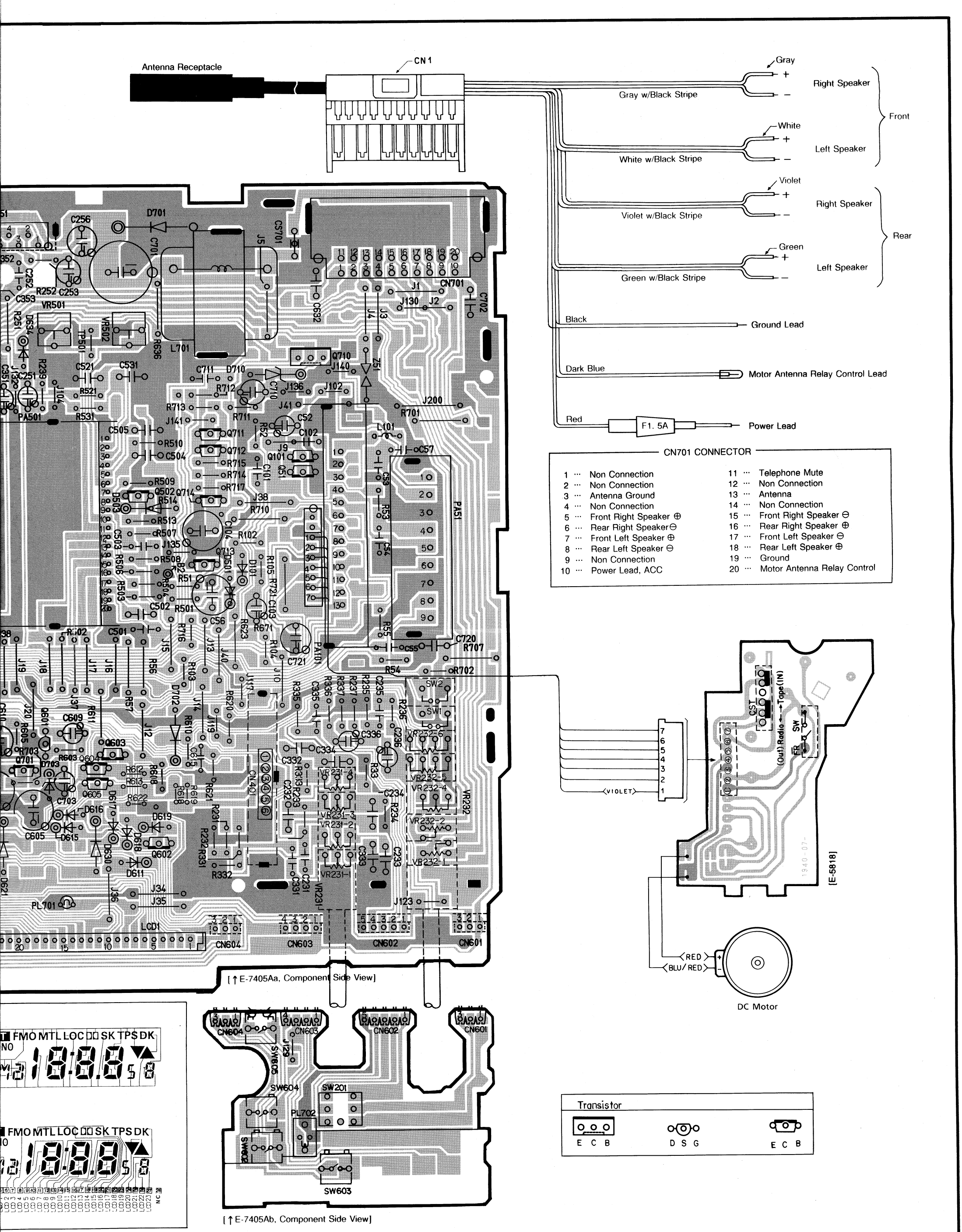

Digital Control Receiver/Cassette Player

SCHEMATIC DIAGRAM MODEL CQ-D55VEG

PA51	
1	0V
2	0.5V
3	0V
4	4.9V
5	7.8V
6	0V
7	0V
8	8.0V
9	1.7V

PA501	
1	0V
2	0V
3	2.8V
4	2.8V
5	2.5V
6	0V
7	4.2V
8	2.5V
9	1.8V
10	0.8V
11	1.4V
12	4.6V
13	3.4V
14	0V
15	0V
16	3.2V
17	0.8V
18	8.0V
19	0V
20	0V

PA101	
1	0V
2	0V
3	0V
4	2.9V
5	1.3V
6	8.0V
7	0V
8	0V
9	-
10	0V
11	-
12	-
13	2.0V

Q51	
B	0V
C	3.9V
E	0V

Q101	
B	0V
C	0.1V
E	0V

IC651	
1	0V
2	4.8V
3	0V
4	0V
5	0V
6	0V
7	0V
8	0V
9	5.3V
10	3.9V
11	3.9V
12	3.9V
13	4.8V
14	0V
15	4.8V
16	5.3V

Q201	
B	0V
C	0V
E	0V

IC201	
1	0.8V
2	0.7V
3	3.2V
4	8.0V
5	0V
6	3.2V
7	0.7V
8	0.8V

IC221	
1	0V
2	8.0V
3	2.8V
4	0V
5	2.8V
6	0V
7	0V
8	0V
9	0V
10	7.8V
11	0V
12	0V
13	2.7V
14	2.8V
15	8.0V
16	8.0V

IC231	
1	3.8V
2	3.8V
3	3.8V
4	0V
5	3.8V
6	3.9V
7	3.9V
8	7.0V

IC251	
1	4.6V
2	4.1V
3	4.7V
4	4.4V
5	0V
6	5.0V
7	4.4V
8	4.8V
9	14.4V
10	14.4V
11	6.0V
12	6.0V
13	0V
14	0V
15	6.0V
16	6.0V
17	14.4V

Q633	
B	0V
C	3.8V
E	0V

Q634	
B	0V
C	3.8V
E	0V

Q711	
B	1.6V
C	8.0V
E	8.0V

Q712	
B	1.6V
C	8.0V
E	8.0V

Q713	
B	1.6V
C	8.0V
E	8.0V

Q221	
1	7.0V
2	2.9V
3	3.3V
4	0V

Q321	
1	7.0V
2	2.9V
3	3.3V
4	0V

Q202	
B	0V
C	0V
E	0V

Q301	
B	0V
C	0V
E	0V

Q302	
B	0V
C	0V
E	0V

Q231	
B	0V
C	0V
E	0V

Q331	
B	0V
C	0V
E	0V

Q630	
B	4.2V
C	0V
E	4.8V

Q632	
B	0V
C	3.8V
E	0V

Q710	
B	8.6V
C	14.1V
E	8.0V

Q702	
B	5.8V
C	14.4V
E	5.2V

Q701	
B	5.6V
C	8.0V
E	5.0V

Q631	
B	14.4V
C	0V
E	14.1V

Q602	
B	0V
C	2.2V
E	0V

Q601	
D	7.5V
G	1.1V
S	0V

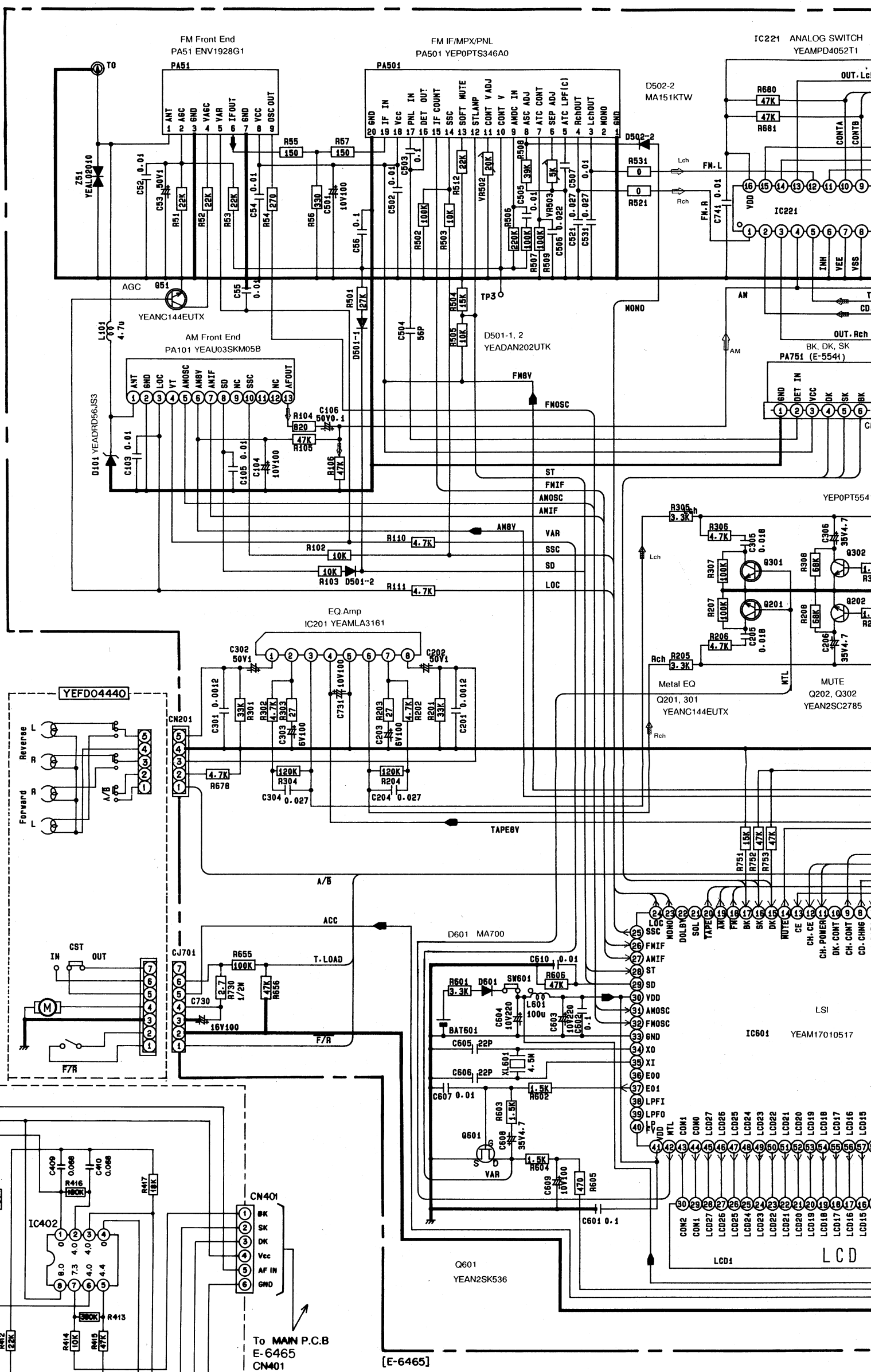

NOTES:
- Voltage measurements are with respect to ground, with a digital voltmeter, with controls set for normal operation, no signal applied, 14.4V DC power supply.
- Exact value determined by production process. This schematic diagram is the latest at the time of printing and subject to change without notice. Replace same value as original parts.

- Symbol
  - Rch
  - Lch
  - Rch

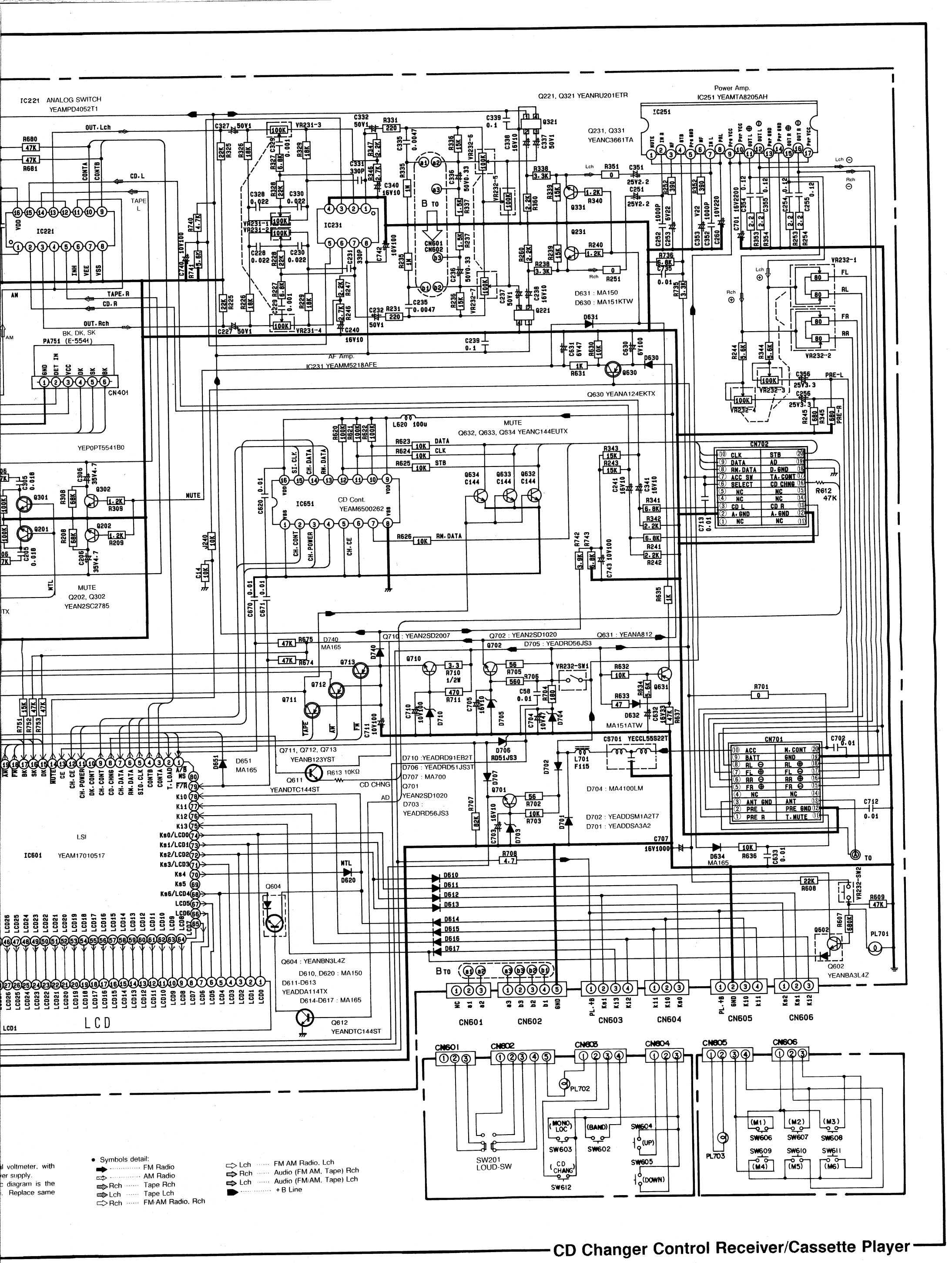

CD Changer Control Receiver/Cassette Player

WIRING DIAGRAM MODEL CQ-D55VEG

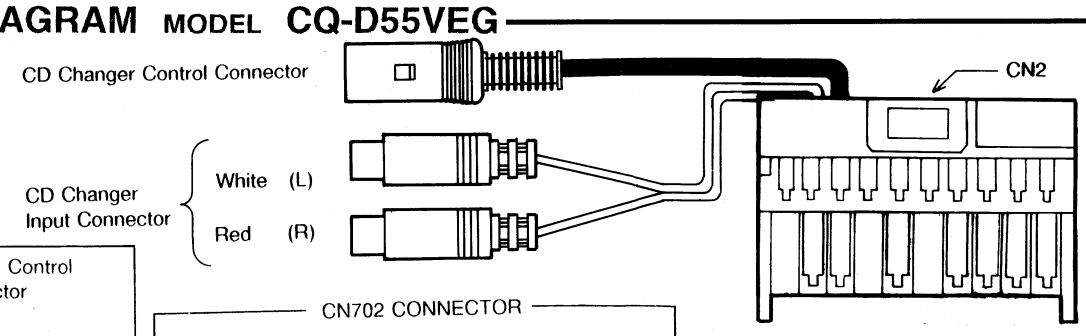

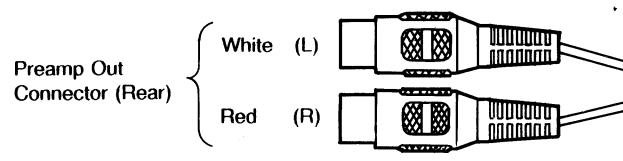

CD Changer Control Connector

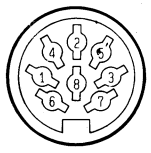

1	DATE	5	RM
2	CLK	6	ACC
3	SELECT	7	AD
4	STB	8	Digital GND

CN702 CONNECTOR

1	Non Connection	11	Non Connection
2	Analog Ground	12	Analog Ground
3	CD. L	13	CD. R
4	Non Connection	14	Non Connection
5	Non Connection	15	Non Connection
6	SELECT	16	CD CHNG
7	ACC Switch	17	TA CONT
8	RM DATA	18	Digital Ground
9	DATA	19	AD
10	CLK	20	STB

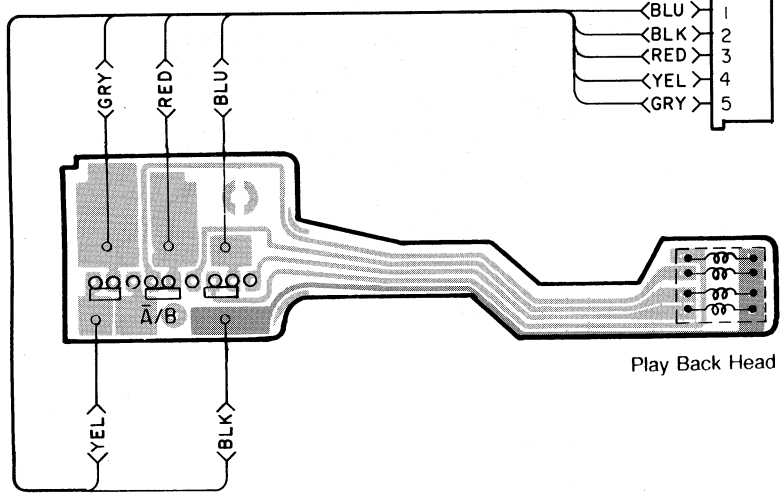

Play Back Head

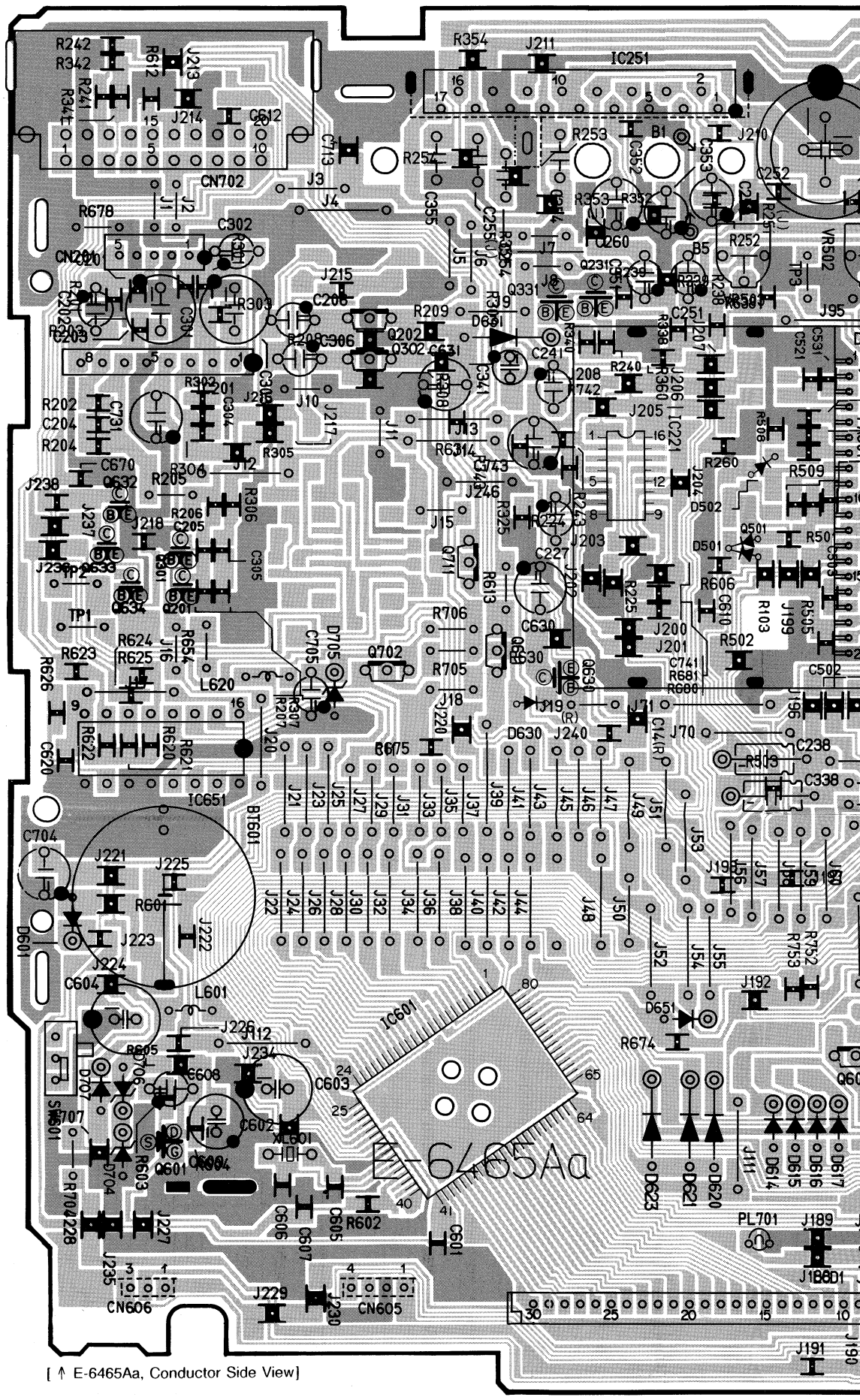

[↑ E-6465Aa, Conductor Side View]

PA51	
1	0V
2	0.5V
3	0V
4	4.9V
5	7.8V
6	0V
7	0V
8	8.0V
9	1.7V

PA501	
1	0V
2	0V
3	2.8V
4	2.8V
5	2.5V
6	0V
7	4.2V
8	2.5V
9	1.8V
10	0.8V
11	1.4V
12	4.6V
13	3.4V
14	0V
15	0V
16	3.2V
17	0.8V
18	8.0V
19	0V
20	0V

PA101	
1	0V
2	0V
3	0V
4	2.9V
5	1.3V
6	8.0V
7	0V
8	0V
9	-
10	0V
11	-
12	-
13	2.0V

Q51	
B	0V
C	3.9V
E	0V

IC201	
1	0.8V
2	0.7V
3	3.2V
4	8.0V
5	0V
6	3.2V
7	0.7V
8	0.8V

IC221	
1	0V
2	8.0V
3	2.8V
4	0V
5	2.8V
6	0V
7	0V
8	0V
9	0V
10	7.8V
11	0V
12	0V
13	2.7V
14	2.8V
15	8.0V
16	8.0V

IC231	
1	3.8V
2	3.8V
3	3.8V
4	0V
5	3.8V
6	3.9V
7	3.9V
8	7.0V

IC251	
1	4.6V
2	4.1V
3	4.7V
4	4.4V
5	0V
6	5.0V
7	4.4V
8	4.8V
9	14.4V
10	14.4V
11	6.0V
12	6.0V
13	0V
14	0V
15	6.0V
16	6.0V
17	14.4V

IC651	
1	0V
2	4.8V
3	0V
4	0V
5	0V
6	0V
7	0V
8	0V
9	5.3V
10	3.9V
11	3.9V
12	3.9V
13	4.8V
14	0V
15	4.8V
16	5.3V

Q201	
B	0V
C	0V
E	0V

Q202	
B	0V
C	0V
E	0V

Q301	
B	0V
C	0V
E	0V

Q302	
B	0V
C	0V
E	0V

Q231	
B	0V
C	0V
E	0V

Q331	
B	0V
C	0V
E	0V

Q630	
B	4.2V
C	0V
E	4.8V

Q632	
B	0V
C	3.8V
E	0V

Q633	
B	0V
C	3.8V
E	0V

Q634	
B	0V
C	3.8V
E	0V

Q711	
B	1.6V
C	8.0V
E	8.0V

Q712	
B	1.6V
C	8.0V
E	8.0V

Q713	
B	1.6V
C	8.0V
E	8.0V

Q710	
B	8.6V
C	14.1V
E	8.0V

Q702	
B	5.8V
C	14.4V
E	5.2V

Q701	
B	5.6V
C	8.0V
E	5.0V

Q631	
B	14.4V
C	0V
E	14.1V

Q602	
B	0V
C	2.2V
E	0V

Q601	
D	7.5V
G	1.1V
S	0V

Q221	
1	7.0V
2	2.9V
3	3.3V
4	0V

Q321	
1	7.0V
2	2.9V
3	3.3V
4	0V

IC401	
1	0.5V
2	0.1V
3	0V
4	0V
5	4.1V
6	4.0V
7	8.0V
8	4.0V
9	4.6V
10	0V
11	0V
12	4.0V
13	4.6V
14	4.0V
15	4.0V
16	4.0V
17	0V
18	3.6V
19	3.6V
20	0V

IC402	
1	0V
2	4.0V
3	4.0V
4	0V
5	4.4V
6	4.0V
7	7.3V
8	8.0V

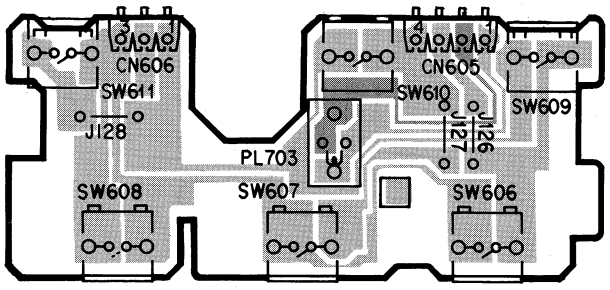

[↑ E-6465Ac, Component Side View]

Transistors

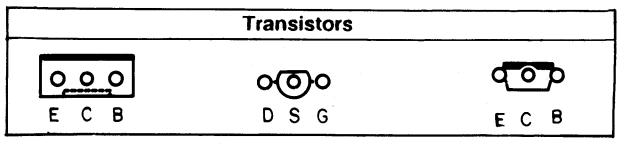

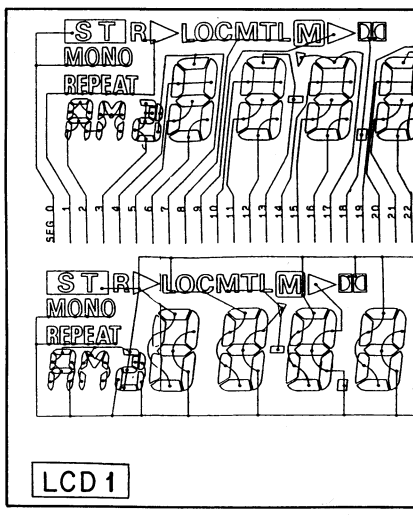

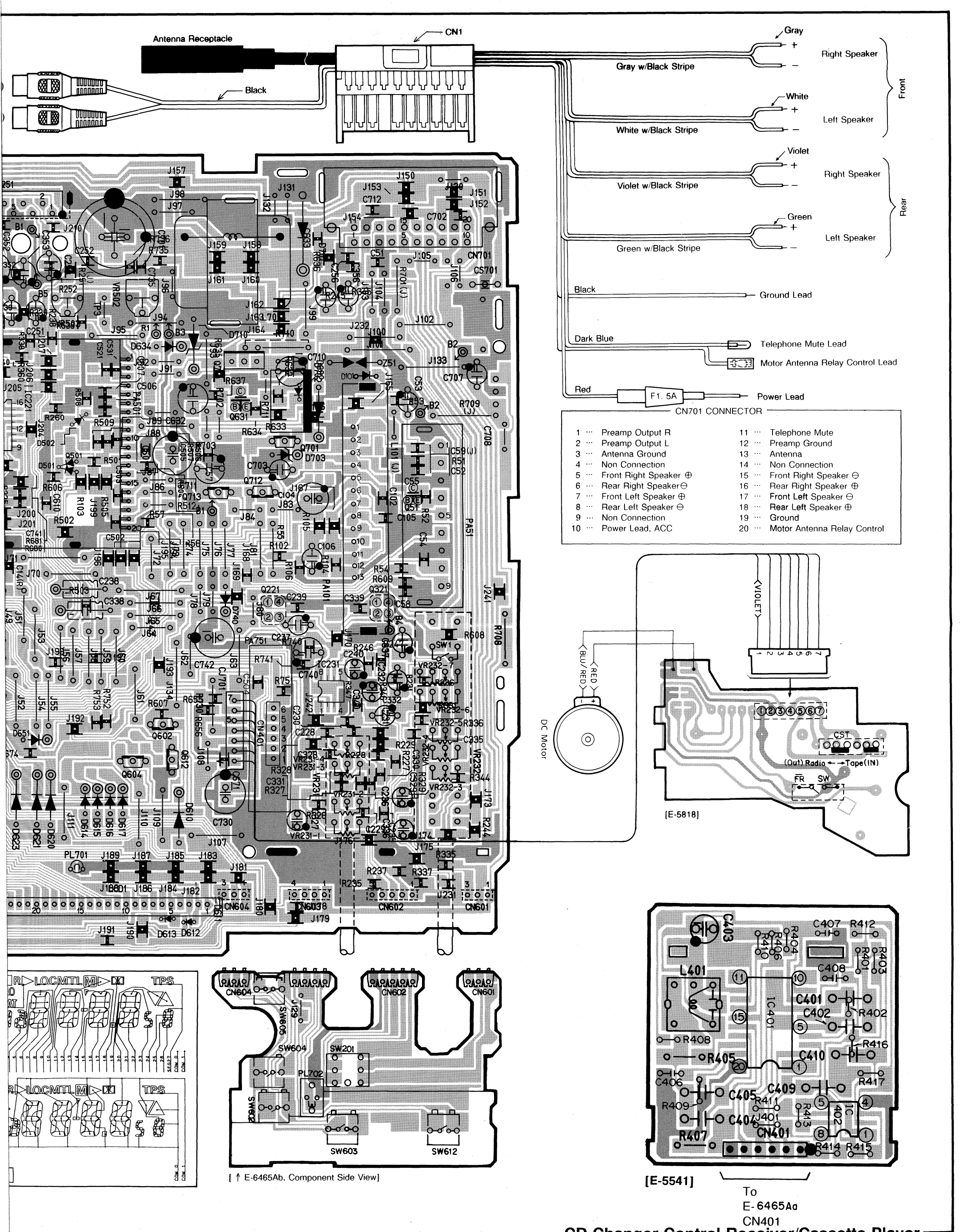

CD Changer Control Receiver/Cassette Player

ALIGNMENT INSTURUCTIONS

- Power Supply Voltage : DC 14.4V
- Output Impedance : 4Ω
- Balance Control : Center
- Volume Control : Set for 0.5W output
- Bass Control : Center
- Treble Control : Center
- Fader Control : Front

NOTE : Do not align the AM, FM and FM MPX package blocks. When the package block is necessary, it will be supplied already aligned at the factory.

1. FM CONTROL VOLTAGE ALEGNMENT

Step	Alignment Item	Band Select	Signal Generator	Input Terminal	VM Connection	Display	Adjust	Remarks
❶	FM CONTROL VOLTAGE	FM	98.0 MHz 24 DB/μV 30%	Antenna Receptacle	CQ-D50VEG TP501-Ground CQ-D55VEG TP3-Ground	98.0 MHz	VR501 VR503	• Adjust for 2.3V ±0.05V.

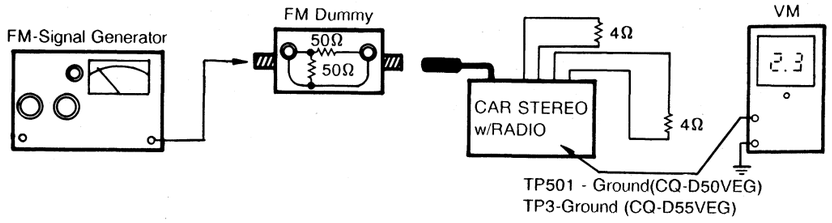

2. FM MULTIPLEX SEPARATION ALIGNMENT

Step	Alignment Item	Band Select	Signal Generator	Input Terminal	VM Connection	Display	Adjust	Remarks
❷	FM MPX	FM	98.0 MHz 74 DB/μV [400Hz Mod.]	Antenna Receptacle	Speaker Terminals	98.0 MHz	VR502	• Adjust for maximum separation.

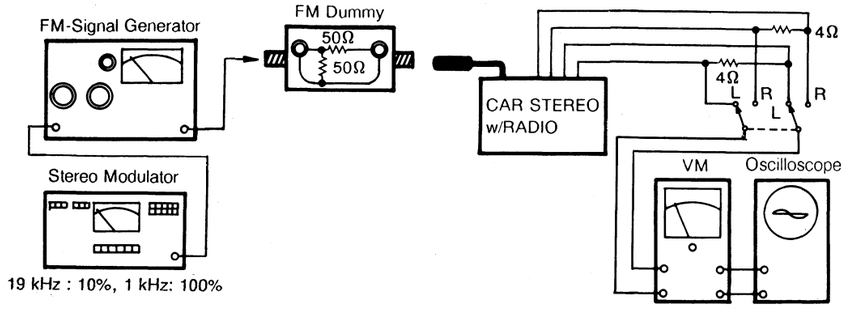

3. HEAD ADZIMUTH ALIGNMENT

Step	Alignment Item	Test Tape	Input Terminal	VM Connection	Adjust	Remarks
❸	Head Adzimuth	TCC - 153	Playback Head	Speaker Terminals	Head Adzimuth adjustment Screw	• Adjust for maximum output.

ALIGNMENT POINTS

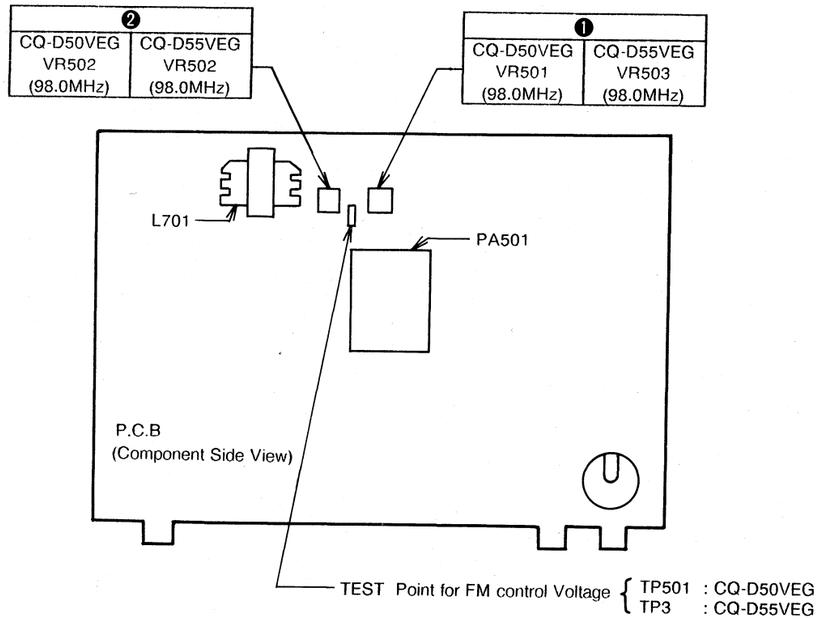

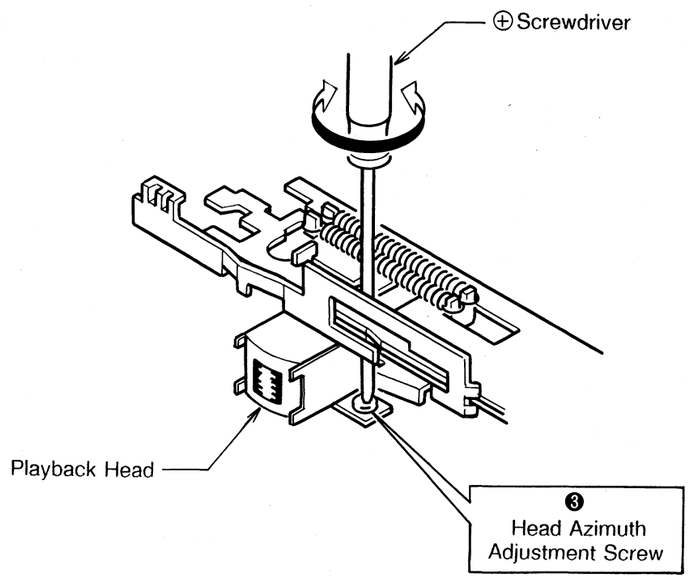

 CQ-D50VEG/D55VEG

ABGLEICH ANLEITUNG

- Stromspannung : DC 14.4V
- Auspangsimpedanz : 4Ω
- Ausgpngsleistung : 0.5W
- Balanceregler : Mitte
- Überblendregler : Mitte
- Klangregler (Höhen/Tiefton) : Mitte
- Gegörrichtige Frequenzgangkorrektur : Aus
- Dolby Rauschverminderungstaste : Aus

Hinweis
Niemals LW/MW, UKW-ZF und MPX abgleichen. Vom Werk gelieferete Austauschplatinen sind bereits abgestimmt.

1. UKW STEUERSPANNUNGß-ABGLEICH

Stuf	Abgleich-objekt	Stillung des Wellenbereich-umschalters	Meßsender-freqienz	Ankopplung des Meßsenders	VM-Anschluß	Anzeige	Abgleich	Ammerkung
❶	UKW STEUER-SPANNUNGß	FM	98.0 MHz 24 DB/µV 30%	Antenn-anschluß	CQ-D50VEG TP501-Endung CQ-D55VEG TP3-Endung	98.0 MHz	VR501 VR503	• Auf 2.3 ± 0.05V Stellen

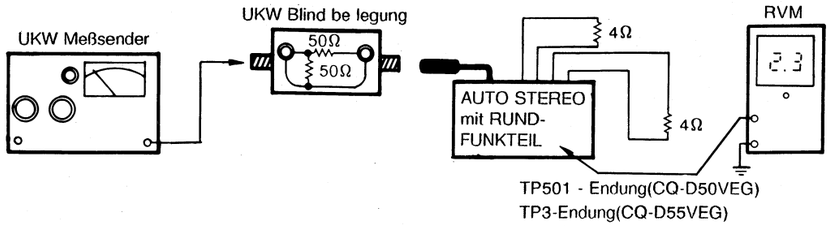

2. ABGLEICH VON UKW-MULTIPLEX TRENNUNG

Stuf	Abgleich-objekt	Stillung des Wellenbereich-umschalters	Meßsender-freqienz	Ankopplung des Meßsenders	VM-Anschluß	Anzeige	Abgleich	Ammerkung
❷	UKW MPX	UKW	98.0 MHz 74 DB/µV [400Hz Mod]	Antenn-steckdose	Lautsprecher-anschüsse	98.0 MHz	VR502	• Auf maximalen Trennung einstellen.

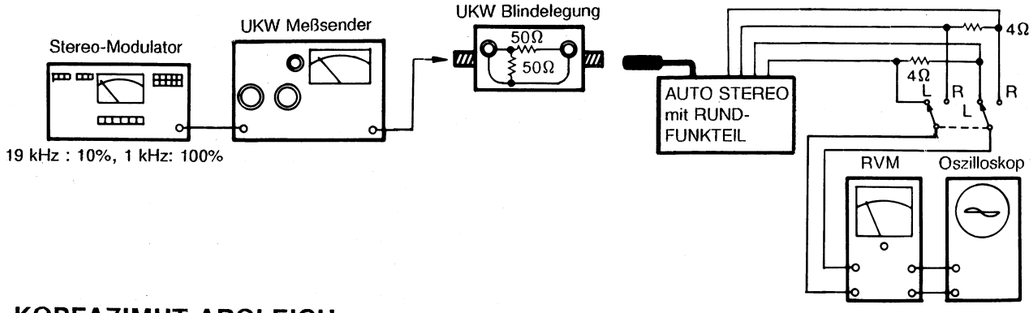

3. KOPFAZIMUT-ABGLEICH

Stuf	Abgleich-objekt	Testband	Ankopplung des Meßsenders	VM-Anschluß	Abgleich	Ammerkung
❸	KOPFAZI-MUT	TCC-153	Wiedergabekopf	Lautsprecher-anschüsse	Kopfazimut-Eimstellschraube	• Auf maximalen Ausgang abgleichen

ALIGNMENT POINTS

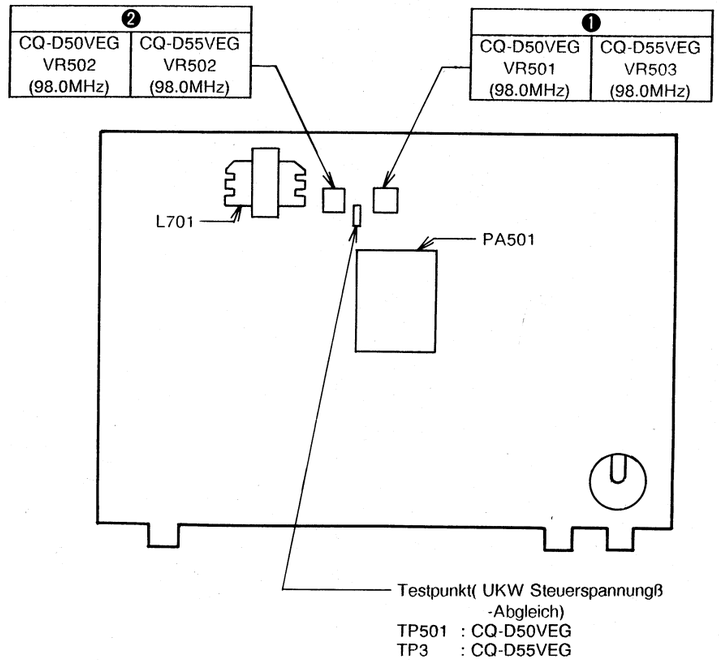

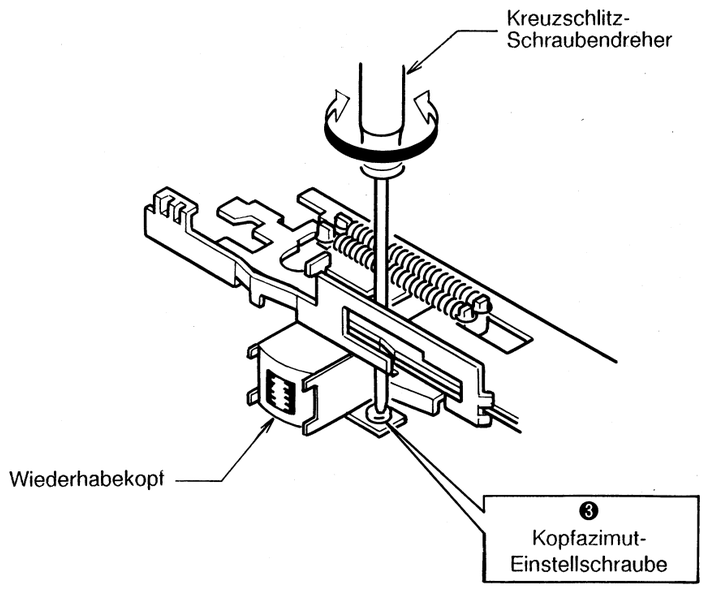

OPERATION OF LSI (CQ-D50VEG)

■ IC601, YEAM1723G573

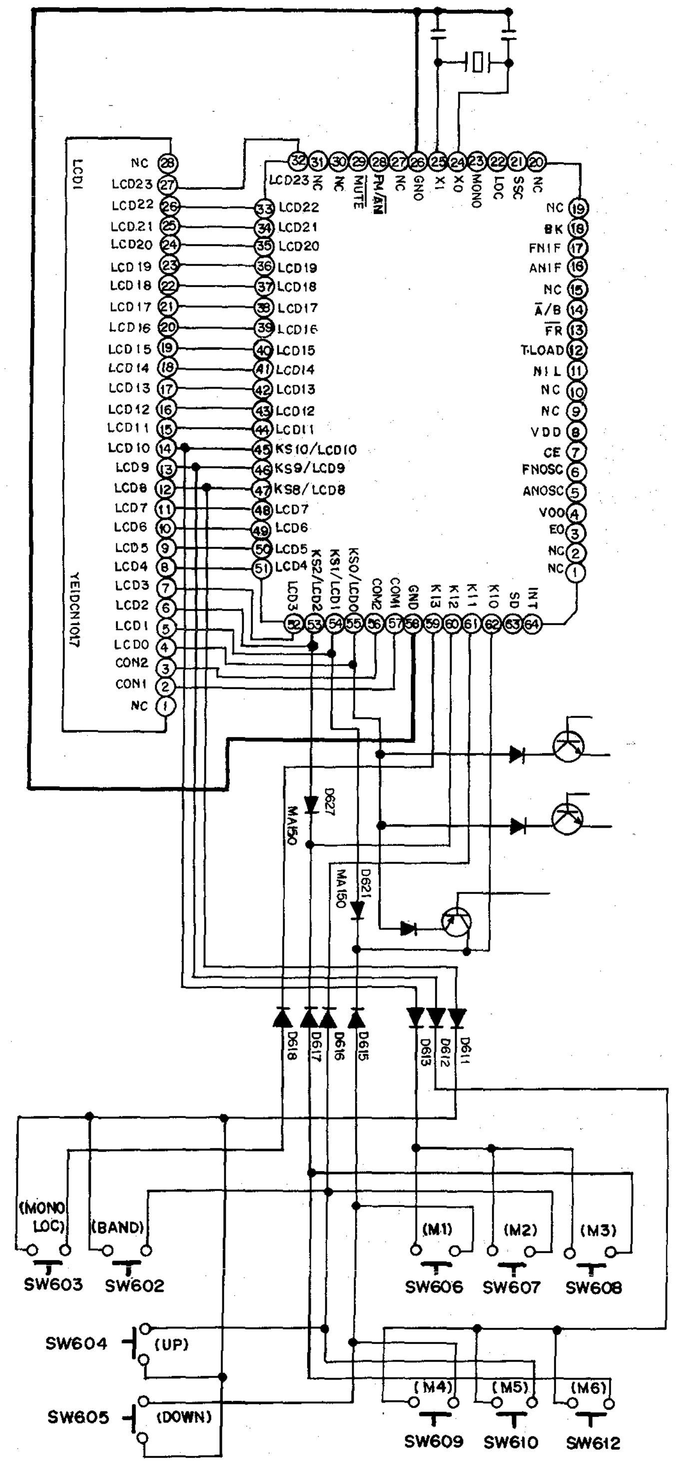

(5) AM OSC

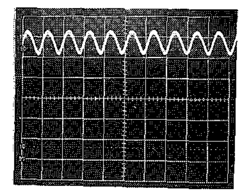

0.1V/DIV, 0.2μS/DIV

(24) XO

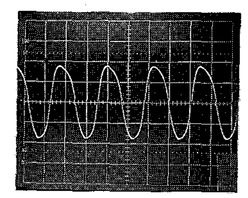

0.1V/DIV, 0.1μS/DIV

(5) XI

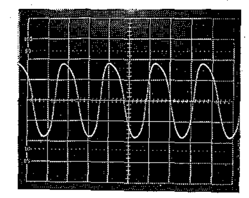

0.1V/DIV, 0.1μS/DIV

(40) LCD15

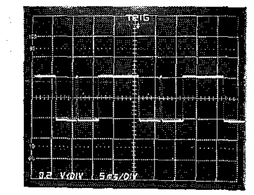

0.2V/DIV, 5mS/DIV

(51) LCD4

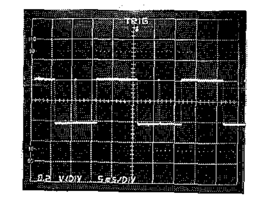

0.2V/DIV, 5mS/DIV

(56) COM2

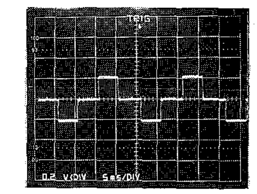

0.2V/DIV, 5mS/DIV

(57) COM1

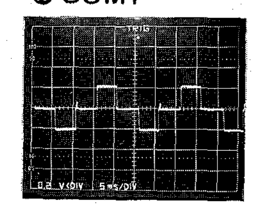

0.2V/DIV, 5mS/DIV

(55) KS0(M2 On)

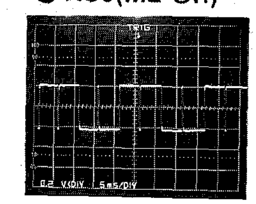

0.2V/DIV, 5mS/DIV

(60) KI2

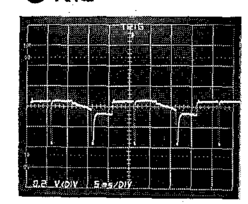

0.2V/DIV, 5mS/DIV

(60) KI2 (M6 On)

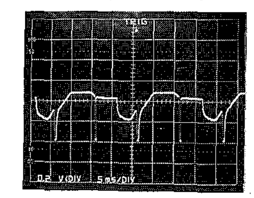

0.2V/DIV, 5mS/DIV

(62) KI0

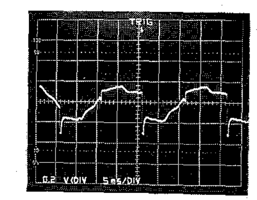

0.2V/DIV, 5mS/DIV

Pin No.	Port	Description	Pin No.	Port	Description	Pin No.	Port	Description
1	NC	Nom Connection	23	MONO	Output, Meno / $\overline{FMD}$ Change over	45	KS10/LCD10	Output, LCD Segment Drive Signal and Scan Signal
2	NC		24	X_0	4.5MHz Crystal Osilator	46	KS9/LCD9	
3	E02	Output, PLL Phase detection Error	25	X_1		47	KS8/LCD8	
4	VDD	+5V Power Supply	26	GND	Ground	48	LCD 7	Output, LCD Segment Drive Signal
5	AM OSC	Input, AM Local Oscillate Signal	27	NC	Non Connection	49	LCD 6	
6	FM OSC	Input, FM Local Oscillate Signal	28	FM / AM	Output, FM / AM Band Selector	50	LCD 5	
7	CE	Input, Power Supply detection	29	MUTE	Output, Muting	51	LCD 4	
8	VDD	+5V Power Supply	30	LCD INH	Output, LCD Driver INH	52	LCD 3	
9	NC	Nom Connection	31	LDC CE	Output, LCD Driver CE	53	LCD2/KS2	Output, LCD Segment Drive Signal and Scan Signal
10	NC		32	LCD 23	Output, LCD Segment Drive Signal	54	LCD1/KS1	
11	MTL	Output, Equalizer Change	33	LCD 22		55	LCD0/KS0	
12	T · LOAD	Input, tape Insert detection	34	LCD 21		56	COM 1	Output, LCD Segment Signal
13	$\overline{FR}$	Input, tape FF / REW Detection	35	LCD 20		57	COM 2	
14	A / $\overline{B}$	Input, tape A / B Program Detection	36	LCD 19		58	GND	Ground
15	NC	Nom Connection	37	LCD 18		59	KI 3	Input, Key Return
16	AM IF	Input, AM IF Countor	38	LCD 17		60	KI 2	
17	FM IF	Input, FM IF Countor	39	LCD 16		61	KI 1	
18	BK	Input, BK Signal Counter	40	LCD 15		62	KI 0	
19	NC	Nom Connection	41	LCD 14		63	SD	Input, Sensitivity Level
20	NC		42	LCD 13		64	INT	
21	SSC	Output, Search Control	43	LCD 12				
22	LOC	Output, Local Search Sensitivity Control	44	LCD 11				

PRECAUTION IN HANDLING

(For Prevention of electrostatic fracture)

1. Except during operation keep all terminals in contact with conductive member. (The device is in this condition.)
2. Always connect the tip of soldering iron, tools, and tester to the ground when using.
3. Do not plug or unplug with the power supplied.
4. Never apply signal or voltage with the power off.
5. Keep all unused terminals at Vcc or Vdd.
6. Never apply the voltage exceeding the line voltage to the input terminal.

■ IC601, YEAM17010517

OPERATION OF LSI (CQ-D55VEG)

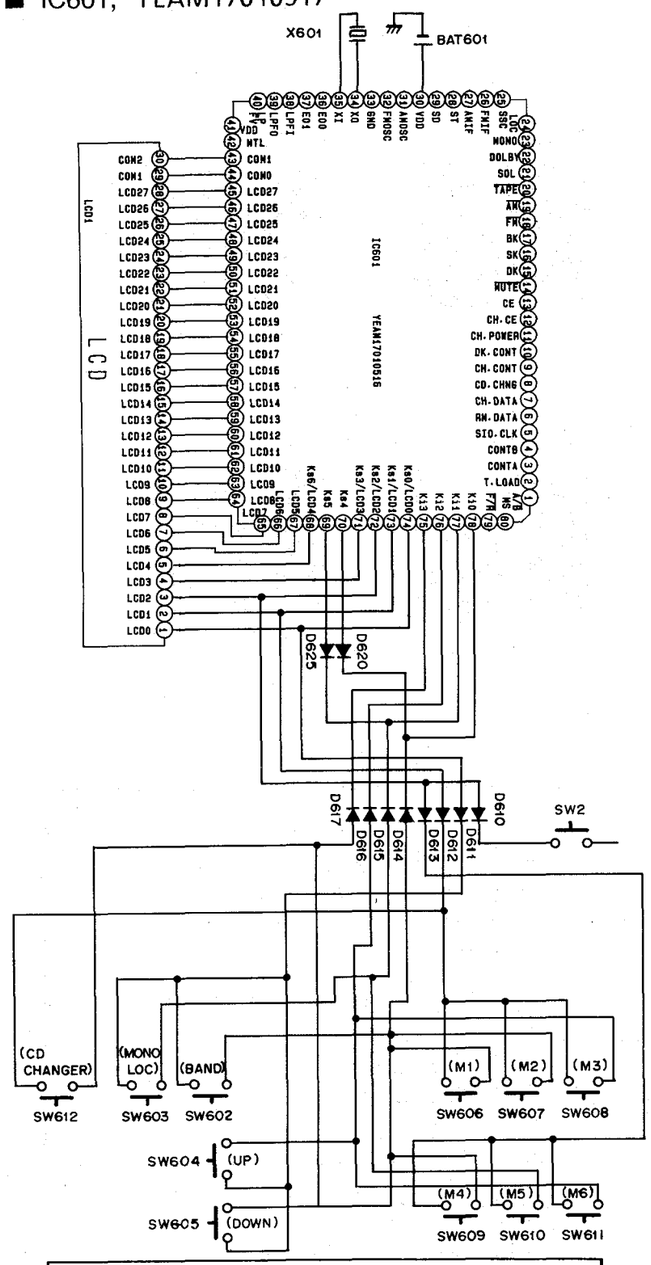

These waveforms are measured by using ten time (×10) probe.

㉛ Pin AMOS

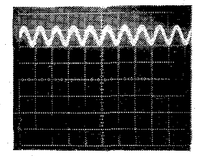

0.1V/DIV, 0.1mS/DIV

㉞ Pin XO

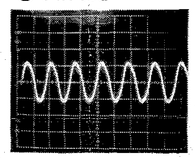

0.2V/DIV, 10μS/DIV

㉟ Pin XI

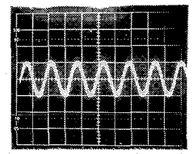

0.2V/DIV, 10μS/DIV

㊸ Pin COM1

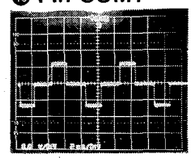

0.2V/DIV, 2mS/DIV

㊹ Pin COM0

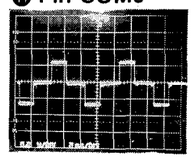

0.2V/DIV, 2mS/DIV

㊺ Pin LCD26

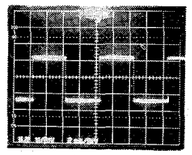

0.2V/DIV, 2mS/DIV

㊹ Pin LCD8

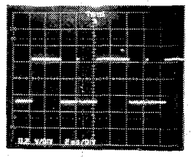

0.2V/DIV, 2mS/DIV

㊿ Pin KS4

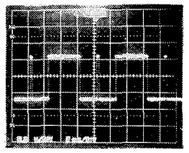

0.2V/DIV, 2mS/DIV

⑦⑧ Pin KI0

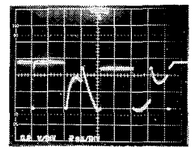

0.2V/DIV, 2mS/DIV

⑦⑤ Pin KI3

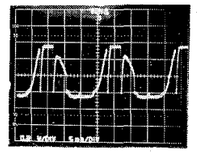

0.2V/DIV, 5mS/DIV

Pin No.	Port	Description	Pin No.	Port	Description	Pin No.	Port	Description
1	A/B	Input, tape A / B Program Detection	29	SD	Intput, Field Stringth	57	LCD15	Output, LCD Segment Drive Signal
2	T-LOAD	Input, tape Insert detection	30	VDD	+5V Power Supply	58	LCD14	
3	CONT A	Output, Analog switch control	31	AM OSC	Input, AM Local Oscillate Signal	59	LCD13	
4	CONT B		32	FM OSC	Input, FM Local Oscillate Signal	60	LCD12	
5	SIO. CLK	Output, CD changer, Remocon clock	33	GND	Ground	61	LCD11	
6	RM. DATE	Output, Remocon Data	34	X0	4.5MHz Crystal Oscillator	62	LCD10	
7	CH. DATE	Input, CD Changer Date	35	X1		63	LCD9	
8	NC	Non Connection	36	NC	Nom Connection	64	LCD8	
9	CH. CONT	Output, Changer Indecate Data	37	EO1	Output, PLL Phase Error	65	LCD7	
10	NC	Nom Connection	38	NC	Nom Connection	66	LCD6	
11	CH.POWER	Input, Changer Power detection	39	NC		67	LCD5	
12	CHNG CE	Input, Changer Chip Enable	40	NC		68	LCD4	Output, Altenate SwtchScanSignal
13	CE	Input, tape FF / REW Detection	41	VDD	+5V Power Supply	69	KS5	Output, Original Sting Scan Signal
14	$\overline{MUTE}$	Output, Muting	42	MTL	Output, Egualizser Change	70	KS4	
15	DK	Input, DK Signal Countor	43	COM1	Output, LCD Common Signal	71	LCD3/ks3	Output, LCD Segmint Drive Signal and can Signal
16	SK	Input, SK Signal Countor	44	COMO		72	LCD2/ks2	
17	BK	Input, BK Signal Countor	45	LCD27	Output, LCD Segment Drive Signal	73	LCD1/ks1	
18	$\overline{FM}$	Output, FM Power Supply Control	46	LCD26		74	LCD0/ks0	
19	$\overline{AM}$	Output, AM Power Supply Control	47	LCD25		75	KI3	Input, KeyReturn
20	$\overline{TAPE}$	Output, TAPE Power Supply Control	48	LCD24		76	KI2	
21	NC	Nom Connection	49	LCD23		77	KI1	
22	NC		50	LCD22		78	KI0	
23	MONO	Output, Mono/FM0 changeover	51	LCD21		79	F/R	Input, Tape FF/REW Detection
24	LOC	Output, Local Serch Sensitivity Control	52	LCD20		80	NC	Nom Connection
25	SSC	Output, Serch Control	53	LCD19				
26	FM IF	Input, FM IF Countor	54	LCD18				
27	AM IF	Input, AM IF Countor	55	LCD17				
28	ST	Input, Streo Signal	56	LCD16				

PRECAUTION IN HANDLING

(For Prevention of electrostatic fracture)

1. Except during operation keep all terminals in contact with conductive member. (The device is in this condition.)
2. Always connect the tip of soldering iron, tools, and tester to the ground when using.
3. Do not plug or unplug with the power supplied.
4. Never apply signal or voltage with the power off.
5. Keep all unused terminals at Vcc or Vdd.
6. Never apply the voltage exceeding the line voltage to the input terminal.

PACKAGE and IC Block Diagram

■ PA51, ENV19282G1

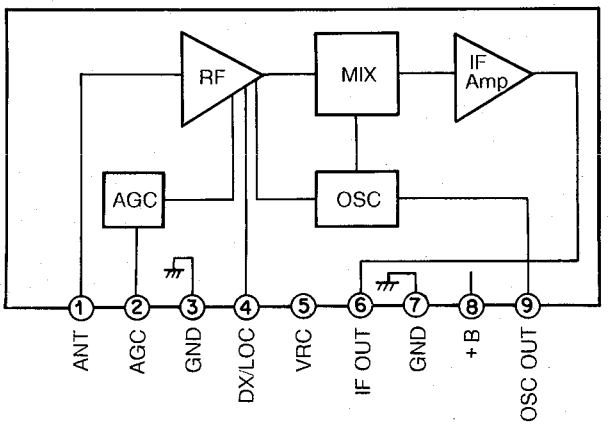

■ PA501, YEP0PTS346A0

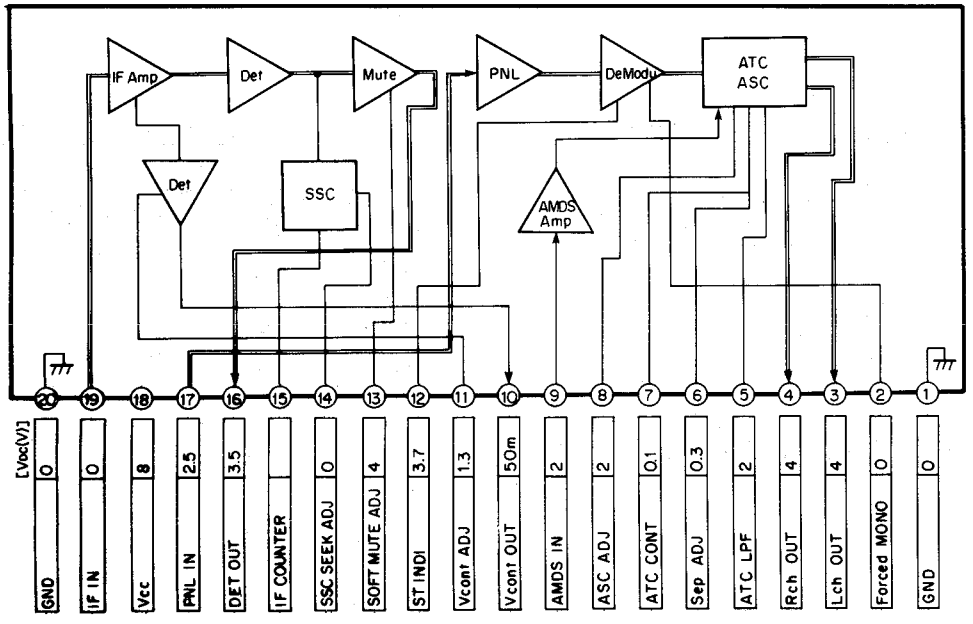

■ PA101, YEAU03SKM05B

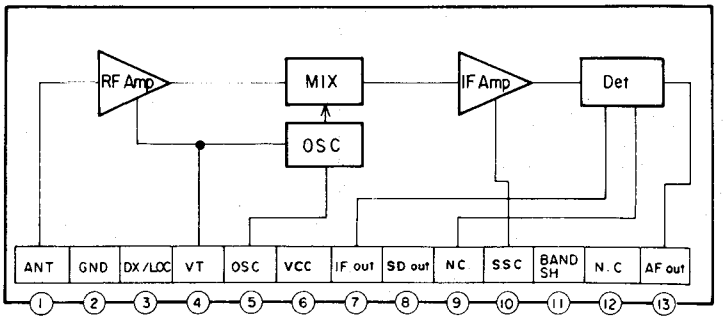

■ IC201, YEAMLA3161

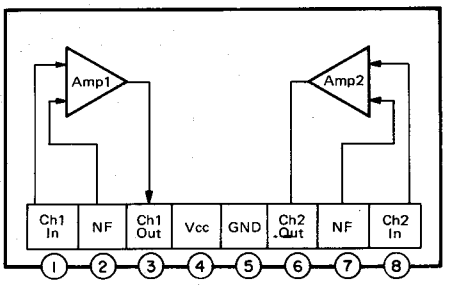

■ IC251, YEAMTA8205AH

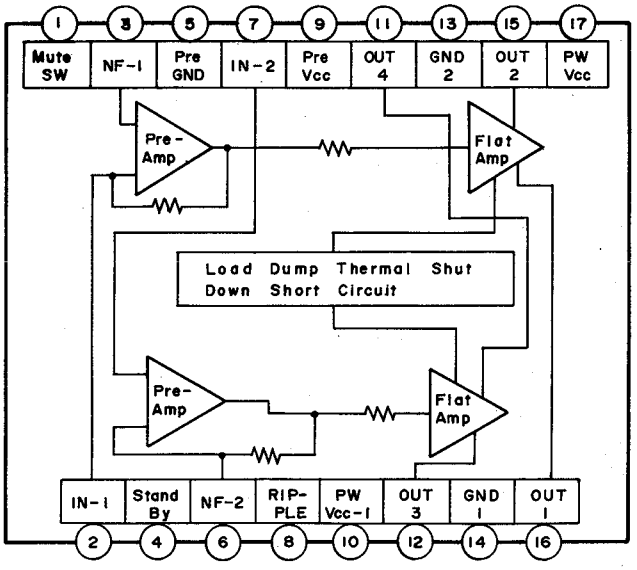

■ IC222, YEAMUPD4066C(CQ-D50VEG)

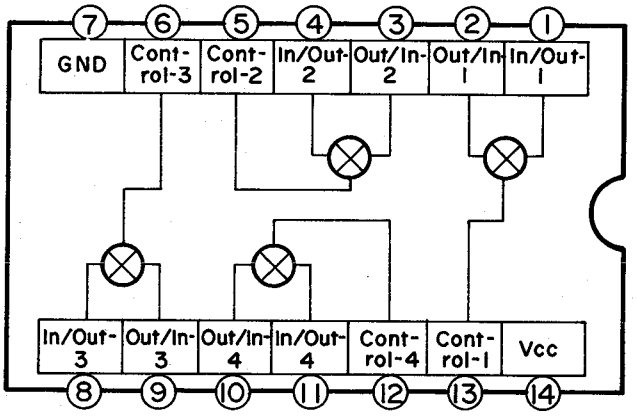

■ IC231, YEAMM5218AFP(CQ-D55VEG)

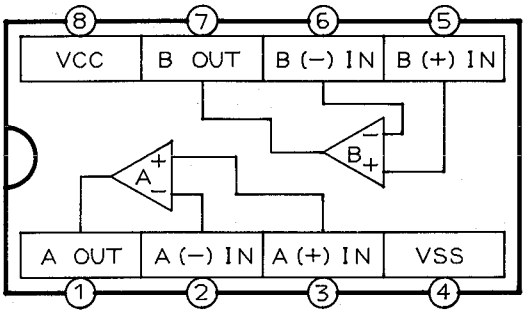

■ IC651, YEAM6500262(CQ-D55VEG)

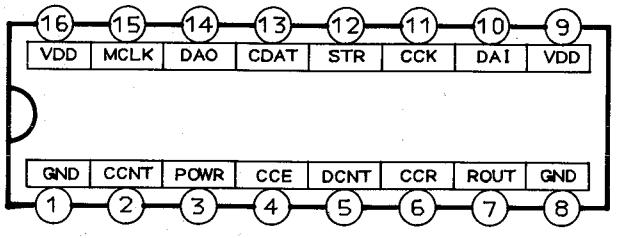

■ IC221, YEAMPD4052T1(CQ-D55VEG)

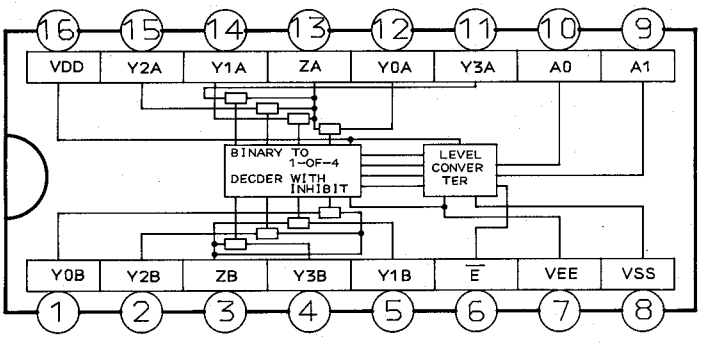

■ IC601, YEAM1723G573(CQ-D50VEG)

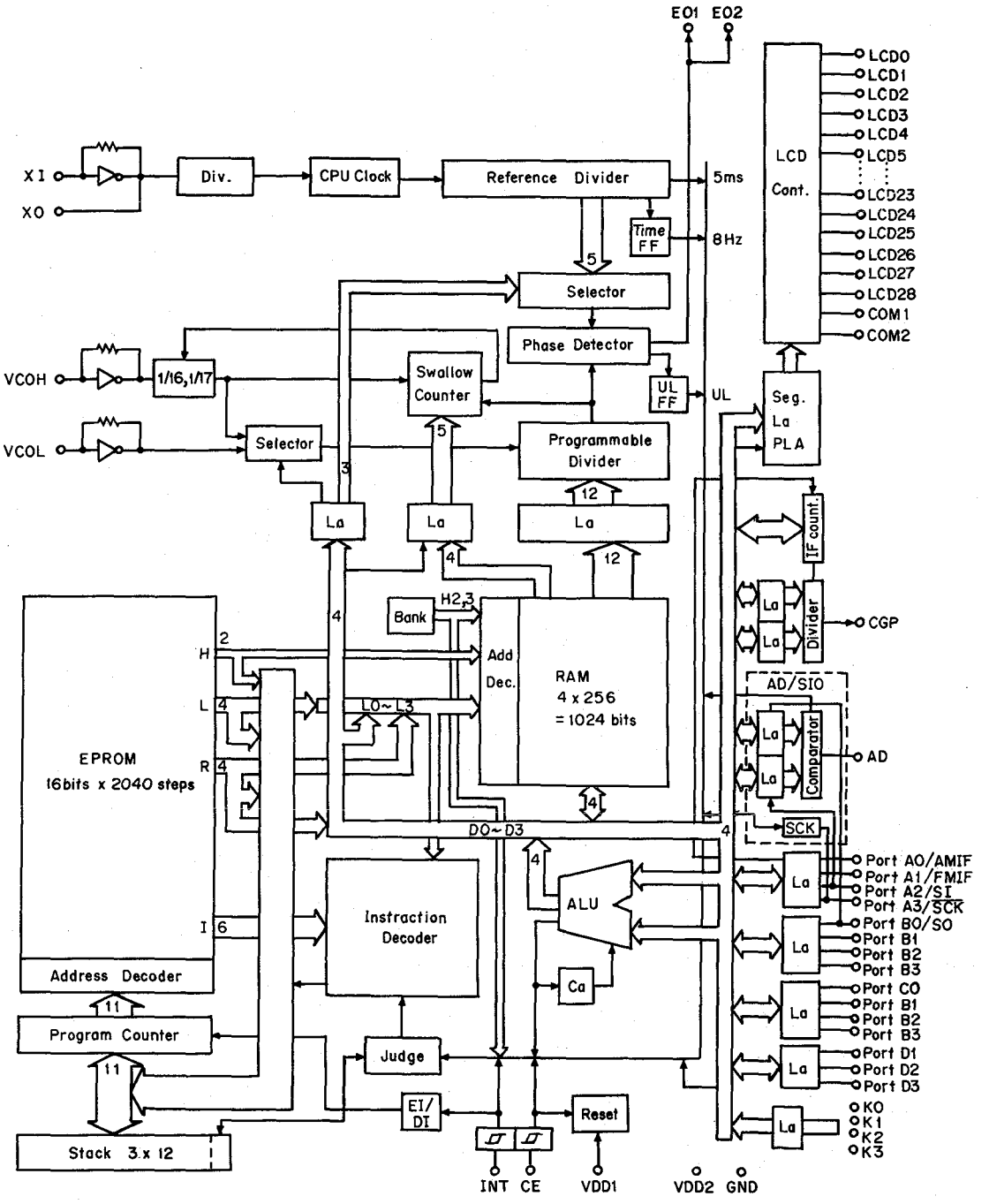

■ IC601, YEAM17010517(CQ-D55VEG)

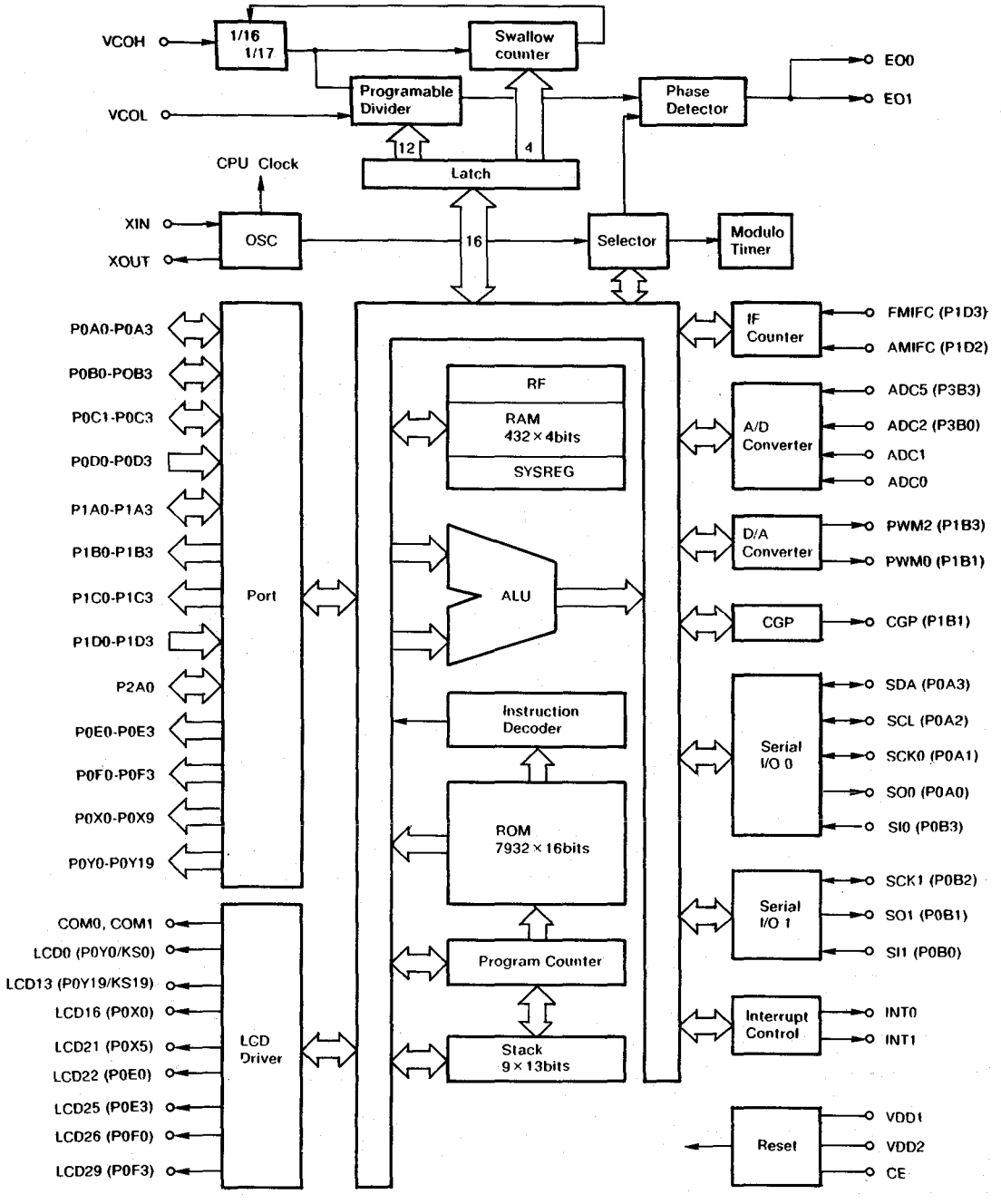

DISASSEMBLY INSTRUCTIONS

DECK ASS'Y REMOVAL

To remove the Upper Cover, Under and Escutcheon Ass'y, refer to EXPLODED VIEW(UNIT)on page 21.

(1) Disconnect the 7P and 5P connectors before disconnecting the deck.

(2) When the deck is mounted back in place, reconnect them after tightening the Screws.

(3) Tighten the screws in the order of①,②,③, and④.

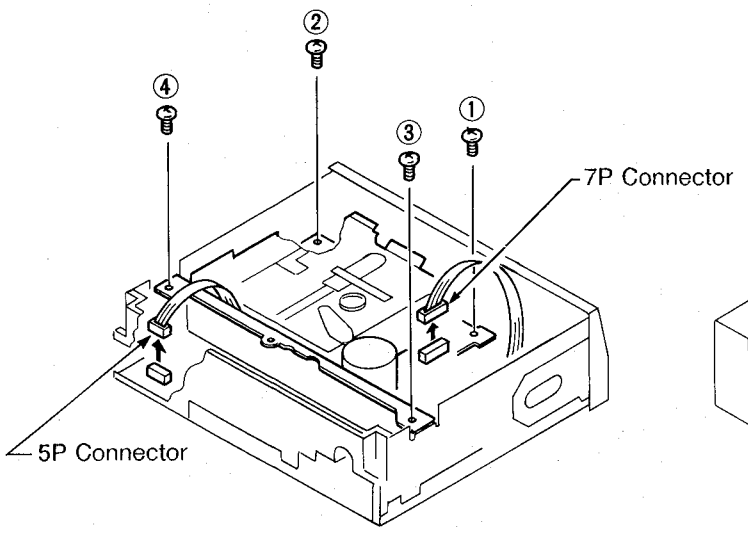

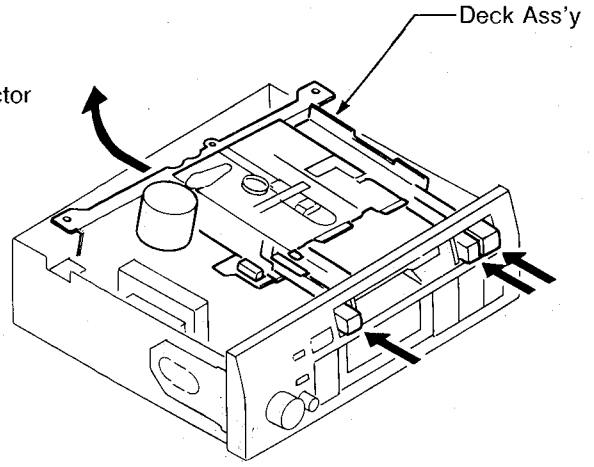

PILOT LAMP REMOVAL

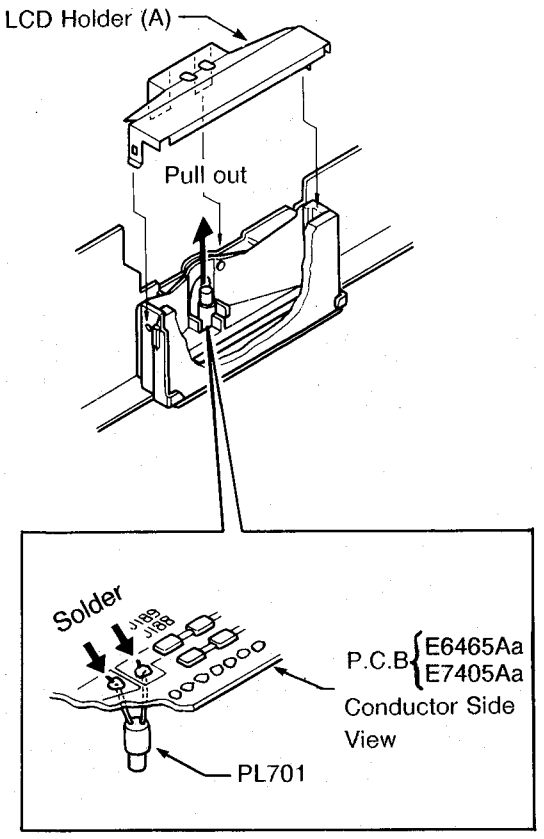

BATTERY (BT601) REPLACEMENT

(1) Turn the knob fully counterclockwise to turn power off.

(2) Remove the top cover, bottom cover, and deck assembly.

(3) Unsolder the battery terminals on the pattern end and replace the battery with a new one.

•NOTES :

- Keep SW601 in the original position during battery replacement. It is not necessary to operate SW601.
- After replacing the battery, check that a voltage of 2V or more is applied to pin 30 of IC601 with power off.
- After the above check, install the deck assembly back, and turn power on, check that all the functions of the set operate normally, and then place the covers backon.

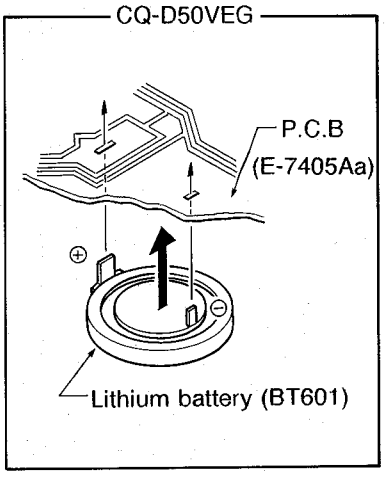

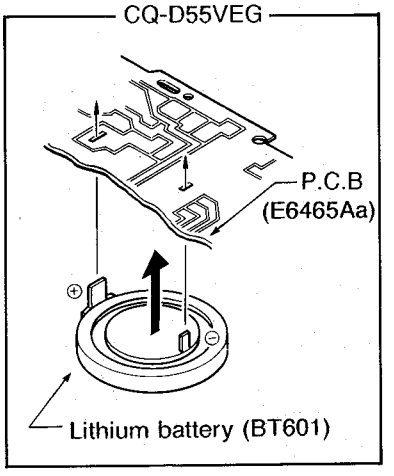

Replacement Parts List
Model NO. CQ-D50VEG

NOTES :

1. Be sure to make your orders of replacement parts according to this list.
2. Important safety notice : Components identified by ⚠ mark have special characteristics important for safety. When replacing any of these components, use only manufacturer's specified parts.
3. Next to the Ref. No. in the parts list is a location key, to show the general location of the parts shown in the exploded drawing, as in a road map.
4. Printed circuit board assembly with mark (NLA) is no longer available after production discontinuation of the complete set.

Ref. No.	Part No.	Part Code	Part Name & Description	Pcs set	Remarks
MISCELLANEOUS					
F (4-C)	YESAF01009		Fuse7A (30mm)	1	
Z51	YEAL02010T		Neon Tube	1	
PL701 (2-B)	YEAL01078A		Pilot Lamp	1	
PL702,703	YEAL01110		Pilot Lamp	2	
CNP201 (1-A)(1-B)	YEAE011402		5P Connector	1	
CN1 (3-B)	EMCQRE58B33V		20P Connector (QRB)	1	
CN201 (2-C)	YEAEM2005S		5P Connector	1	
CN401 (2-B)	YEAE0106WK		6P Connector (E5541)	1	
CN601 (1-A)	YEAE0103IWK		3P Connector	1	
CN602 (1-A)	YEAE0105IWK		5P Connector	1	
CN603 (1-A)	YEAE0104IWK		4P Connector	1	
CN604 (1-B)	YEAE0103IWK		3P Connector	1	
CN605 (1-B)	YEAE0104IWK		4P Connector	1	
CN606 (1-B)	YEAE0103IWK		3P Connector	1	
CN701 (2-B)	YEAE011976		20P Connector	1	
CN702 (2-B)	YEAE0708MXNB		8P Connector	1	
1 (4-B)	YEFA031172		Upper Cover	1	
2 (2-A)	YEFE11085		Knob	1	
3 (2-A)	YEFE07432		Knob	1	
4 (2-A)	YEFE08327		Knob	1	
5 (1-A)	YEFE133126		Knob LOUD	1	
6 (2-A)	YEFC023632		Escutcheon Assy	1	
7 (1-C)	YEFA05532A		Upper Cover	1	
8 (2-B)	YEFA07285		Front Plate	1	
9 (2-B)	YEFA09358BK		Side Plate (R)	1	

MODEL CQ-D50VEG

Ref. No.	Part No.	Part Code	Part Name & Description	Pcs set	Remarks
10 (2-B)	YEFA09360A		Side Plate (L)	1	
11 (3-C)	YEFF01702		Hear Shink	1	
12 (2-C)	YEFX0213266		Mounting Bracket	1	
13 (2-C)	YEFX0213323		Mounting Bracket for IC	1	
14 (1-A)(1-B)	YEFK04404		Pilot Lamp Holder	2	
15 (2-B)	YEFK06515A		LCD Holder (A)	1	
16 (1-B)	YEFK06516		LCD Holder (C)	1	
17 (1-C)	YEFV011408		Insulator	1	
18 (2-B)	YEFV021140		Shade	1	
19 (1-A)(1-B)(1-C)	YEP0PT7405E0		PCB w/Component	1	NLA
20 ⊛	XTB3 + 8FFX		Screw	2	
21 ★	YEJT03038		Screw	2	
22 ⊙	XTB3 + 6FFX		Screw	11	
23 (2-C)	YEABCR2032H4		Battery	1	
24 (2-B)	YEFA13864		Case	1	
25 (3-B)	YEFX0213347		Quick Release Bracket	1	
26 ⊠	YEJV08036		Screw	2	
27 (1-A)	YEFC05513		Trim Plate (R)	1	
28 (1-A)	YEFC05514		Handle Cover	1	
29 (1-A)	YEFC05517		Trim Plate (L)	1	
30 (2-B)	YEP0PT5541B0		PCB w/Component	1	NLA
31 (1-A)	YEFX0213270		Handle Assy	1	
32 (3-A)	YEFX0461396		Eject Lever	1	
33 (3-A)	YEFE133123		Knob EJECT	1	
34 (3-A)	YEFE133124		Knob FF	1	
35 (3-A)	YEFE133125		Knob REW	1	
36 (3-A)	YEFX0213268		Mounting Bracket for Deck	1	
37 ☆	YEJS06027		Screw	4	
38 ◈	YEJT03081		Screw	1	

EXPLODED VIEW MODEL CQ-D50VEG(UNIT)

■ Numbers in ○ are indicated REF. No. in the REPLACEMENT PARTS LIST.

■ The symbols next to the screws indicate as follows.

20	⊛	XTB3+8FFX	⊕Screw
22	⊙	XTB3+6FFX	⊕Screw
21	★	YEJT03038	⊕Screw
26	☒	YEJV08036	⊕Screw
37	☆	YEJS06027	⊕Screw
38	◈	YEJT03081	⊕Screw

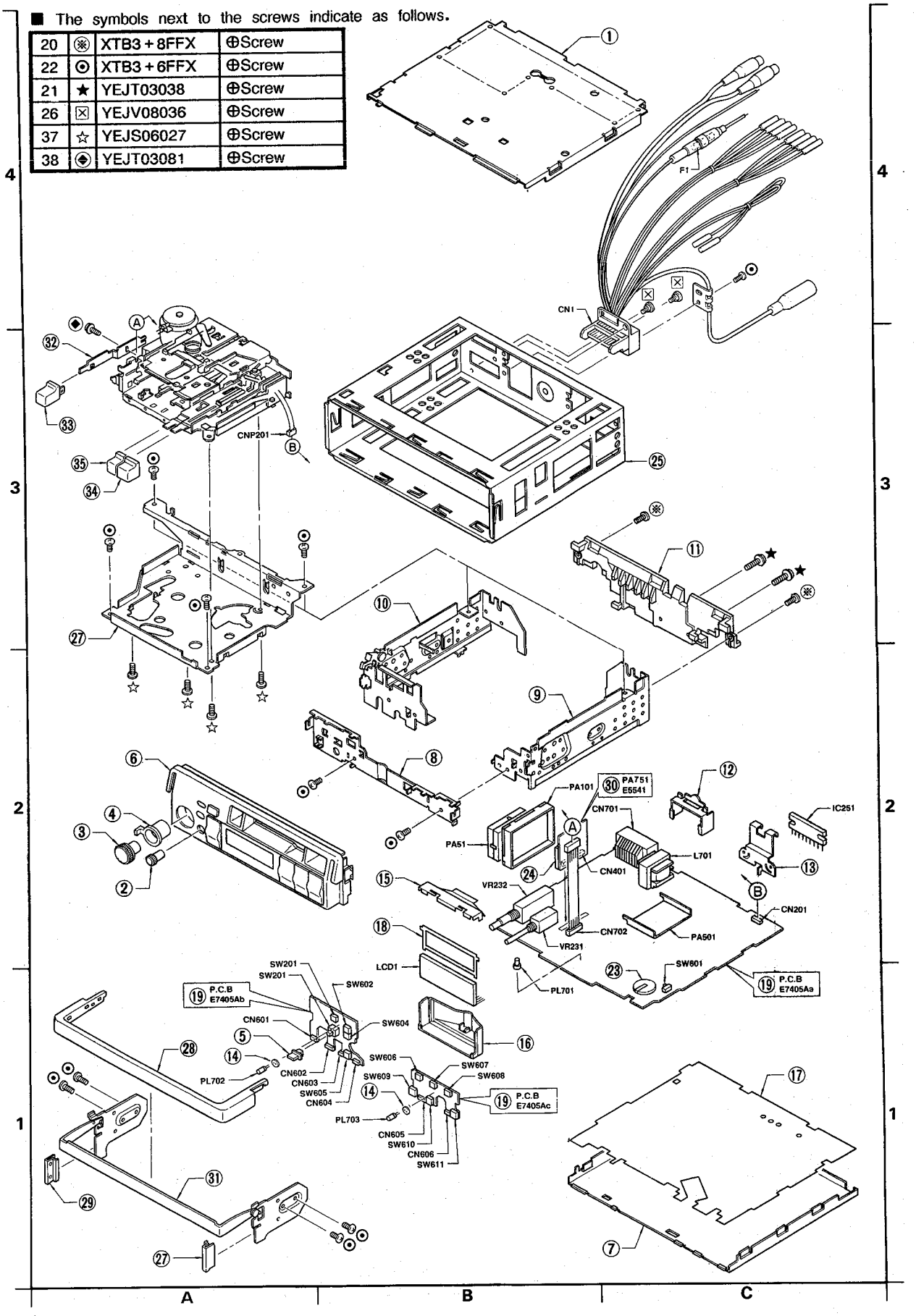

MODEL CQ-D50VEG

ICs AND TRANSISTORS

Ref. No.	Part No.	Part Code	Part Name & Description	Pcs set	Remarks
PA101	YEAU03SKM05B		AM Tunner	1	
PA501	YEP0PTS346A0		PCB w/Component	1	
PA51	ENV19282G1		FM Front End	1	
IC201	YEAMLA3161		IC	1	
IC222	YEAMUPD4066C		IC	1	
IC251	YEAMTA8205AH		IC	1	
IC601	YEAM1723G573		IC	1	
Q51	YEANDTC144ST		Transistor	1	
Q201	YEANDTC144ST		Transistor	1	
Q202	YEAN2SC2785		Transistor	1	
Q221	YEAN2SC2785		Transistor	1	
Q231	YEAN2SC3576		Transistor	1	
Q261	YEANDTC144ST		Transistor	1	
Q301	YEANDTC144ST		Transistor	1	
Q302	YEAN2SC2785		Transistor	1	
Q321	YEAN2SC2785		Transistor	1	
Q331	YEAN2SC3576		Transistor	1	
Q601	YEAN2SK583		Transistor	1	
Q602, 603	YEAN2SA1175		Transistor	2	
Q604, 605	YEAN2SC2785		Transistor	2	
Q631, 632	YEAN2SA1175		Transistor	2	
Q701	YEAN2SD1020		Transistor	1	
Q710	YEAN2SD2007		Transistor	1	
Q711, 712	YEAN2SB810		Transistor	2	
Q713, 714	YEAN2SC2785		Transistor	2	
[5541B]					
IC401	YEAMTDA1579T		IC	1	
IC402	YEAMM5218AFE		IC	1	

DIODES

Ref. No.	Part No.	Part Code	Part Name & Description	Pcs set	Remarks
D101	MA165		Diode	1	
D121	MA165		Diode	1	
D131	MA165		Diode	1	
D210	MA4100LM		Diode	1	
D503	MA150		Diode	1	
D521	MA165		Diode	1	
D531	MA165		Diode	1	
D601	MA700		Diode	1	
D602, 611	MA165		Diode	2	
D612	MA165		Diode	1	
D613	MA165		Diode	1	
D615	MA165		Diode	1	
D616	MA165		Diode	1	
D617	MA165		Diode	1	
D618	MA165		Diode	1	
D619	MA165		Diode	1	
D621, 625	MA150		Diode	2	
D630	MA150		Diode	1	
D631, 632	MA165		Diode	2	
D633 to 635	MA165		Diode	3	
D701	YEADDSA3A2		Diode	1	
D702	MA150		Diode	1	
D703	YEADRD56JS3		Diode	1	
D704	YEADRD51JS3		Diode	1	
D705	MA1100LTA		Diode	1	
D708	YEADRD51JS3		Diode	1	
D710	YEADRD91EB2		Diode	1	
R501	MA165		Diode	1	

CAPACITORS

Ref. No.	Part No.	Part Code	Part Name & Description	Pcs set	Remarks
C52	ECEA1HKS010		Electrolytic AL, 1MFD 50WV	1	
C53, 54	ECBT1C103NS		Ceramic, 0.01MFD 16WV	2	
C55	ECBT1C103NS		Ceramic, 0.01MFD 16WV	1	
C56	ECEA1AKS221		Electrolytic AL, 220MFD 10WV	1	
C57	ECBT1C103NS		Ceramic, 0.01MFD 16WV	1	
C101	ECBT1C103NS		Ceramic, 0.01MFD 16WV	1	
C103	ECEA1HKSR22		Electrolytic AL, 0.22FD 50WV	1	
C104	ECEA1AKS221		Electrolytic AL, 220MFD 10WV	1	
C201	ECBT1C122MR		Ceramic, 0.0012MFD 16WV	1	
C202	ECEA1HKS010		Electrolytic AL, 1MFD 50WV	1	
C203	ECEA0JKS101		Electrolytic AL, 100MFD 6.3WV	1	
C204	ECQV1H273JZ		Polyester, 0.027MFD 50WV	1	
C205	ECQB1H153JZ		Polyester, 0.015MFD 50WV	1	
C206	ECEA1VKS4R7		Electrolytic AL, 4.7MFD 35WV	1	
C227	ECEA1HKS010		Electrolytic AL, 1MFD 50WV	1	
C230	ECEA1HKS010		Electrolytic AL, 1MFD 50WV	1	
C231	ECBT1C682MR		Ceramic, 0.0068MFD 16WV	1	
C232	ECQV1H393JZ		Polyester, 0.039MFD 50WV	1	
C233	ECQV1H333JZ		Polyester, 0.033MFD 50WV	1	
C234	ECQV1H224JF2		Polyester, 0.22MFD 50WV	1	
C235	ECBT1C472MR5		Ceramic, 0.0047MFD 16WV	1	
C236	ECEA1HUR33		Electrolytic AL, 0.33MFD 50WV	1	
C251	ECEA1EKS4R7		Electrolytic AL, 4.7MFD 25WV	1	
C252	ECBT1H102KB5		Ceramic, 0.001MFD 50WV	1	
C253	ECEA0JU470		Electrolytic AL, 47MFD 6.3WV	1	
C254	ECQV1H124JZ		Polyester, 0.12MFD 50WV	1	
C255	ECQV1H124JZ		Polyester, 0.12MFD 50WV	1	
C256	ECEA1AU221		Electrolytic AL, 220MFD 10WV	1	
C261	ECBT1C103NS		Ceramic, 0.01MFD 50WV	1	
C271	ECEA1CU331		Electrolytic AL, 330MFD 16WV	1	
C275	ECBT1C103NS		Ceramic, 0.01MFD 50WV	1	
C277	ECEA1AKS221		Electrolytic AL, 220MFD 10WV	1	
C278	ECBT1C103NS		Ceramic, 0.01MFD 16WV	1	
C280, 281	YECKD1H561KB		Ceramic, 560PF 50WV	2	
C301	ECBTC122MR		Ceramic, 0.0012MFD 16WV	1	
C302	ECEA1HKS010		Electrolytic AL, 1MFD 50WV	1	
C303	ECEA0JKS101		Electrolytic AL, 100MFD 6.3WV	1	
C304	ECQV1H273JZ		Polyester, 0.027MFD 50WV	1	
C305	ECQB1H153JZ		Polyester, 0.015MFD 50WV	1	
C306	ECEA1VKS4R7		Electrolytic AL, 4.7MFD 35WV	1	
C327	ECEA1HKS010		Electrolytic AL, 1MFD 50WV	1	
C330	ECEA1HKS010		Electrolytic AL, 1MFD 50WV	1	
C331	ECBT1C682MR		Ceramic, 0.0068MFD 16WV	1	
C332	ECQV1H393JZ		Polyester, 0.039MFD 50WV	1	
C333	ECQV1H333JZ		Polyester, 0.033MFD 50WV	1	
C334	ECQV1H224JZ		Polyester, 0.022MFD 50WV	1	
C335	ECBT1C472MR5		Ceramic, 0.0047MFD 16WV	1	
C336	ECEA1HUR33		Electrolytic AL, 0.33MFD 50WV	1	
C351	ECEA1EKS4R7		Electrolytic AL, 4.7MFD 25WV	1	
C352	ECBT1H102KB5		Ceramic, 0.001MFD 50WV	1	
C353	ECEA0JU470		Electrolytic AL, 47MFD 6.3WV	1	
C354	ECQV1H124JZ		Polyester, 0.12MFD 50WV	1	
C355	ECQV1H124JZ		Polyester, 0.12MFD 50WV	1	
C501	ECBT1C103NS		Ceramic, 0.01MFD 16WV	1	
C502	ECQV1H104JZ		Polyester, 0.1MFD 50WV	1	
C503	ECBT1C103NS		Ceramic, 470PF 50WV	1	
C504	ECQB1H223JZ		Polyester, 0.022MFD 50WV	1	
C505	ECQB1H103JZ		Polyester, 0.01MFD 50WV	1	
C510	YEU05F104Z		Ceramic, 0.1MFD 50WV	1	
C521	ECQB1H333JZ		Polyester, 0.033MFD 50WV	1	
C531	ECQV1H333JZ		Polyester, 0.033MFD 50WV	1	
C541	ECBT1H560J5		Ceramic, 56PF 50WV	1	
C601	ECBT1H220J5		Ceramic, 22PF 50WV	1	
C602	ECBT1H220J5		Ceramic, 22PF 50WV	1	
C603	ECBT1C103NS		Ceramic, 0.01MFD 16WV	1	
C604	ECEA1AKS221		Electrolytic AL, 220MFD 10WV	1	

MODEL CQ-D50VEG

Ref. No.	Part No.	Part Code	Part Name & Description	Pcs set	Remarks
C605	ECEA1AKS221		Electrolytic AL, 220MFD 10WV	1	
C606	ECBT1C103NS		Ceramic, 0.01MFD 16WV	1	
C608	ECBT1C103NS		Ceramic, 0.01MFD 16WV	1	
C609	ECEA1VKS4R7		Electrolytic AL, 4.7MFD 35WV	1	
C610	ECEA1AKS101		Electrolytic AL, 100MFD 10WV	1	
C611	ECBT1C103NS		Ceramic, 0.01MFD 16WV	1	
C613, 614	ECBT1C103NS		Ceramic, 0.01MFD 16WV	2	
C615	YEU05F104Z		Ceramic, 0.1MFD 50WV	1	
C616	ECBT1C103NS		Ceramic, 0.01MFD 16WV	1	
C630	ECEA1VKS4R7		Electrolytic AL, 4.7MFD 35WV	1	
C631	ECEA0JKS470		Electrolytic AL, 47MFD 6.3WV	1	
C632	YECCD1E103KB		Ceramic, 0.01MFD 25WV	1	
C633	ECEA1CU100		Electrolytic AL, 10MFD 16WV	1	
C701	ECA1CUG222YB		Electrolytic AL, 2200MFD 16WV	1	
C702	YECCD1E103KB		Ceramic, 0.01MFD 25WV	1	
C703	ECEA1HKS010		Electrolytic AL, 1MFD 50WV	1	
C705	ECEA1AKS470		Electrolytic AL, 47MFD 10WV	1	
C710	ECEA1AKS330		Electrolytic AL, 33MFD 10WV	1	
C711	ECBT1C103NS		Ceramic, 0.01MFD 16WV	1	
C720	YECCD1E103KB		Ceramic, 0.01MFD 25WV	1	
C721	ECEA1CU101		Electrolytic AL, 100MFD 16WV	1	
CS701	YECCL55S222T		Shild through Capacitor 2200PF	1	
[5541]					
C401, 402	ECQV1H683JZ		Polyester 0.068MFD 50WV	2	
C403	ECEA1EKS4R7		Electrolytic AL, 4.7MFD 25WV	1	
C404, 405	ECQV1H683JZ		Polyester 0.068MFD 50WV	2	
C406	YECUS1C563KX		Ceramic, 0.056MFD 16WV	1	
C407	YECUS1E104ZF		Ceramic, 0.1MFD 25WV	1	
C408	YECUS1C563KX		Ceramic, 0.056MFD 16WV	1	
C409, 410	ECQV1H683JZ		Polyester 0.068MFD 50WV	2	

Ref. No.	Part No.	Part Code	Part Name & Description	Pcs set	Remarks
RESISTORS					
R51	ERDS2TJ223		Carbon, 22k ohms 0.25W	1	
R52	ERDS2TJ183		Carbon, 18k ohms 0.25W	1	
R53	ERDS2TJ273		Carbon, 27k ohms 0.25W	1	
R54	ERDS2TJ271		Carbon, 270 ohms 0.25W	1	
R55	ERDS2TJ151		Carbon, 150 ohms 0.25W	1	
R56	ERD25TJ331		Carbon, 330 ohms 0.25W	1	
R57	ERD25TJ151		Carbon, 150 ohms 0.25W	1	
R102, 103	ERDS2TJ103		Carbon, 10k ohms 0.25W	2	
R104	ERDS2TJ392		Carbon, 3.9k ohms 0.25W	1	
R105, 106	ERDS2TJ473		Carbon, 47k ohms 0.25W	2	
R201	ERDS2TJ333		Carbon, 33k ohms 0.25W	1	
R202	ERDS2TJ390		Carbon, 39 ohms 0.25W	1	
R203	ERDS2TJ472		Carbon, 4.7k ohms 0.25W	1	
R204	ERDS2TJ124		Carbon, 120k ohms 0.25W	1	
R205	ERDS2TJ332		Carbon, 3.3k ohms 0.25W	1	
R206	ERDS2TJ472		Carbon, 4.7k ohms 0.25W	1	
R207	ERDS2TJ104		Carbon, 100k ohms 0.25W	1	
R208	ERDS2TJ683		Carbon, 68k ohms 0.25W	1	
R209	ERDS2TJ122		Carbon, 1.2k ohms 0.25W	1	
R225	ERDS2TJ223		Carbon, 22k ohms 0.25W	1	
R226	ERDS2TJ224		Carbon, 220k ohms 0.25W	1	
R227	ERDS2TJ122		Carbon, 1.2k ohms 0.25W	1	
R228	ERDS2TJ820		Carbon, 82 ohms 0.25W	1	
R231	ERDS2TJ120		Carbon, 1k ohms 0.25W	1	
R232	ERDS2TJ103		Carbon, 10k ohms 0.25W	1	
R233	ERDS2TJ103		Carbon, 10k ohms 0.25W	1	
R234	ERDS2TJ182		Carbon, 1.8k ohms 0.25W	1	
R235	ERDS2TJ105		Carbon, 1M ohms 0.25W	1	
R236	ERDS2TJ153		Carbon, 15k ohms 0.25W	1	
R237	ERDS2TJ182		Carbon, 1.8k ohms 0.25W	1	
R238	ERD25TJ221		Carbon, 220 ohms 0.25W	1	
R239	ERDS2TJ223		Carbon, 22k ohms 0.25W	1	

Ref. No.	Part No.	Part Code	Part Name & Description	Pcs set	Remarks
R240	ERDS2TJ122		Carbon, 1.2k ohms 0.25W	1	
R251	ERD25TJ122		Carbon, 1.2k ohms 0.25W	1	
R252	ERDS2TJ101		Carbon, 100 ohms 0.25W	1	
R254	ERDS2TJ2R2		Carbon, 2.2 ohms 0.25W	1	
R255	ERDS2TJ2R2		Carbon, 2.2 ohms 0.25W	1	
R262	ERDS2TJ103		Carbon, 10k ohms 0.25W	1	
R271	ERDS2TJ471		Carbon, 470 ohms 0.25W	1	
R275	ERDS2TJ391		Carbon, 390 ohms 0.25W	1	
R278	ERD25TJ472		Carbon, 4.7k ohms 0.25W	1	
R279	ERDS2TJ682		Carbon, 6.8k ohms 0.25W	1	
R301	ERDS2TJ333		Carbon, 33k ohms 0.25W	1	
R302	ERDS2TJ390		Carbon, 39 ohms 0.25W	1	
R303	ERDS2TJ472		Carbon, 4.7k ohms 0.25W	1	
R304	ERDS2TJ124		Carbon, 120k ohms 0.25W	1	
R305	ERDS2TJ332		Carbon, 3.3k ohms 0.25W	1	
R306	ERDS2TJ472		Carbon, 4.7k ohms 0.25W	1	
R307	ERDS2TJ104		Carbon, 100k ohms 0.25W	1	
R308	ERDS2TJ683		Carbon, 68k ohms 0.25W	1	
R309	ERDS2TJ122		Carbon, 1.2k ohms 0.25W	1	
R325	ERDS2TJ223		Carbon, 22k ohms 0.25W	1	
R326	ERDS2TJ224		Carbon, 220k ohms 0.25W	1	
R327	ERDS2TJ122		Carbon, 1.2k ohms 0.25W	1	
R328	ERDS2TJ820		Carbon, 82 ohms 0.25W	1	
R331	ERDS2TJ102		Carbon, 1k ohms 0.25W	1	
R332	ERDS2TJ103		Carbon, 10k ohms 0.25W	1	
R333	ERDS2TJ103		Carbon, 10k ohms 0.25W	1	
R334	ERDS2TJ182		Carbon, 1.8k ohms 0.25W	1	
R335	ERDS2TJ105		Carbon, 1M ohms 0.25W	1	
R336	ERDS2TJ153		Carbon, 15k ohms 0.25W	1	
R337	ERDS2TJ182		Carbon, 1.8k ohms 0.25W	1	
R338	ERD25TJ221		Carbon, 220 ohms 0.25W	1	
R339	ERDS2TJ223		Carbon, 22k ohms 0.25W	1	
R340	ERDS2TJ122		Carbon, 1.2k ohms 0.25W	1	
R351	ERD25TJ122		Carbon, 1.2k ohms 0.25W	1	

Ref. No.	Part No.	Part Code	Part Name & Description	Pcs set	Remarks
R352	ERDS2TJ101		Carbon, 100 ohms 0.25W	1	
R354	ERDS2TJ2R2		Carbon, 2.2 ohms 0.25W	1	
R355	ERDS2TJ2R2		Carbon, 2.2 ohms 0.25W	1	
R502	ERD25TJ103		Carbon, 10k ohms 0.25W	1	
R503	ERDS2TJ104		Carbon, 100k ohms 0.25W	1	
R504	ERDS2TJ223		Carbon, 22k ohms 0.25W	1	
R506	ERDS2TJ104		Carbon, 100k ohms 0.25W	1	
R507	ERDS2TJ224		Carbon, 220k ohms 0.25W	1	
R508	ERDS2TJ104		Carbon, 100k ohms 0.25W	1	
R509	ERDS2TJ393		Carbon, 39k ohms 0.25W	1	
R510	ERDS2TJ104		Carbon, 100k ohms 0.25W	1	
R521	ERDS2TJ392		Carbon, 3.9k ohms 0.25W	1	
R531	ERDS2TJ392		Carbon, 3.9k ohms 0.25W	1	
R601	ERDS2TJ472		Carbon, 4.7k ohms 0.25W	1	
R602	ERDS2TJ152		Carbon, 1.5k ohms 0.25W	1	
R603	ERDS2TJ152		Carbon, 1.5k ohms 0.25W	1	
R604	ERDS2TJ471		Carbon, 470 ohms 0.25W	1	
R605	ERDS2TJ152		Carbon, 1.5k ohms 0.25W	1	
R606	ERDS2TJ472		Carbon, 4.7k ohms 0.25W	1	
R608	ERDS2TJ563		Carbon, 56k ohms 0.25W	1	
R609	ERDS2TJ104		Carbon, 100k ohms 0.25W	1	
R610	ERDS2TJ473		Carbon, 47K ohms 0.25W	1	
R611	ERD25TJ105		Carbon, 1M ohms 0.25W	1	
R612, 613	ERDS2TJ684		Carbon, 680k ohms 0.25W	2	
R614	ERDS2TJ104		Carbon, 100k ohms 0.25W	1	
R615	ERDS2TJ104		Carbon, 100k ohms 0.25W	1	
R616	ERD25TJ103		Carbon, 10k ohms 0.25W	1	
R618 to 620	ERDS2TJ473		Carbon, 47k ohms 0.25W	3	
R621	ERDS2TJ153		Carbon, 15k ohms 0.25W	1	
R622	ERDS2TJ104		Carbon, 100k ohms 0.25W	1	
R623	ERD25TJ472		Carbon, 4.7k ohms 0.25W	1	
R624	ERDS2TJ104		Carbon, 100k ohms 0.25W	1	
R630, 631	ERDS2TJ103		Carbon, 10k ohms 0.25W	2	
R632	ERDS2TJ473		Carbon, 47k ohms 0.25W	1	

MODEL CQ-D50VEG

Ref. No.	Part No.	Part Code	Part Name & Description	Pcs set	Remarks
R633	ERDS2TJ472		Carbon, 4.7k ohms 0.25W	1	
R634	ERDS2TJ222		Carbon, 2.2k ohms 0.25W	1	
R635	ERDS2TJ101		Carbon, 100 ohms 0.25W	1	
R636	ERDS25TJ103		Carbon, 10k ohms 0.25W	1	
R637	ERDS2TJ102		Carbon, 1k ohms 0.25W	1	
R638	ERDS2TJ223		Carbon, 22k ohms 0.25W	1	
R639	ERDS2TJ5R6		Carbon, 5.6 ohms 0.25W	1	
R640	ERDS2TJ562		Carbon, 5.6k ohms 0.25W	1	
R672	ERDS25TJ104		Carbon, 100k ohm 0.25W	1	
R673	ERDS2TJ473		Carbon, 47k ohms 0.25W	1	
R701	ERD25FJ1R0		Carbon, 1 ohm 0.25W	1	
R702	ERDS2TJ101		Carbon, 100 ohms 0.25W	1	
R703	ERDS2TJ103		Carbon, 10k ohms 0.25W	1	
R704	ERDS2TJ823		Carbon, 82k ohms 0.25W	1	
R705	ERDS2TJ181		Carbon, 180 ohms 0.25W	1	
R707	ERDS1FJ4R7		Carbon, 4.7 ohms 0.5W	1	
R708	ERDS2TJ681		Carbon, 680 ohms 0.25W	1	
R711	ERDS2TJ221		Carbon, 220 ohms 0.25W	1	
R712	ERDS2TJ333		Carbon, 33k ohms 0.25W	1	
R713	ERDS2TJ102		Carbon, 1k ohms 0.25W	1	
R714	ERDS2TJ473		Carbon, 47k ohms 0.25W	1	
R715	ERDS2TJ102		Carbon, 1k ohms 0.25W	1	
R716	ERDS2TJ473		Carbon, 47k ohms 0.25W	1	
R717	ERDS2TJ224		Carbon, 220k ohms 0.25W	1	
R721	ERDS1FJ2R7		Carbon, 2.7 ohms 0.5W	1	
R790	ERDS1FJ2R2		Carbon, 2.2 ohms 0.5W	1	
D501	ERDS2TJ273		Carbon, 27k ohms 0.25W	1	

Ref. No.	Part No.	Part Code	Part Name & Description	Pcs set	Remarks
[E5541]					
R401	ERJ6GEYJ473		Metal Coat 47k ohms 0.1W	1	
R402	ERJ6GEYJ394		Metal Coat 390k ohms 0.1W	1	
R403	ERJ6GEYJ563		Metal Coat 56k ohms 0.1W	1	
R404	ERJ6GEYJ683		Metal Coat 68k ohms 0.1W	1	
R405	ER0S2TKF5110		Carbon, 511 ohms 2W	1	
R406	ERJ6GEYJ104		Metal Coat 100k ohms 0.1W	1	
R407	ER0S2TKF6813		Carbon, 2.2 ohms 0.5W	1	
R408	ERJ6GEYJ393		Metal Coat 39k ohms 0.1W	1	
R409	ERJ6GEYJ224		Metal Coat 220k ohms 0.1W	1	
R410	ERJ6GEYJ472		Metal Coat 4.7k ohms 0.1W	1	
R411	ERJ8GCYJ124		Metal Coat 120k ohms 0.13W	1	
R412	ERJ6GEYJ223		Metal Coat 22k ohms 0.1W	1	
R413	ERJ6GEJY394		Metal Coat 390k ohms 0.1W	1	
R414	ERJ6GEJY103		Metal Coat 10k ohms 0.1W	1	
R415	ERJ6GEYJ473		Metal Coat 47k ohms 0.1W	1	
R416	ERJ6GEYJ184		Metal Coat 180k ohms 0.1W	1	
R417	ERJ6GEYJ183		Metal Coat 18k ohms 0.1W	1	
CRYSTALS					
SW201	ESB64501		Loudness	1	
SW601	YEAS07169		Battery Select	1	
SW602 to 611	EVQ21505R		Preset	10	
VARIABLE RESISTOR					
VR231	EVUSLA031B15			1	
VR232	EVUYTRS01169			1	
VR501	EVNDXAA00B24		20k ohms	1	
VR502	EVNDXAA00B53		5k ohms	1	

MODEL CQ-D50VEG

Ref. No.	Part No.	Part Code	Part Name & Description	Pcs set	Remarks
CRYSTALS					
XL601	YEXL49U0450T		Crystal	1	
LCD					
LCD1	YEXDCM1017		LCD	1	
COIL					
L101	YELT02C4R7KT		RF Coil	1	
L401	YELL07S175		OSC Coil	1	
L701	YETQ026F115		Choke Coil	1	
INSTALLATION PARTS					
2	YEFG04019		Rear Support Strap	1	
3	XVG5C25FX		Hex, Bolt (5mmφ×25mm)	1	
4	XNG5AFX		Hex, Nut (5mmφ)	2	
5	XWA5BFX		Spring Washer (5mmφ)	2	
6	XWG5FX		Plain Washer (5mmφ)	2	
7	XWC5CFX		Toothed Lock Washer (5mmφ)	1	
8	YEJV01060		Mounting Bolt (5mmφ)	1	
PRINTING					
	YEFM281860		Instruction Book	1	

Replacement Parts List
Model NO.CQ-D55VEG

NOTES :

1. Be sure to make your orders of replacement parts according to this list.
2. Important safety notice : Components identified by ⚠ mark have special characteristics important for safety. When replacing any of these components, use only manufacturer's specified parts.
3. Next to the Ref. No. in the parts list is a location key, to show the general location of the parts shown in the exploded drawing, as in a road map.
4. Printed circuit board assembly with mark (NLA) is no longer available after production discontinuation of the complete set.

Ref. No.	Part No.	Part Code	Part Name & Description	Pcs set	Remarks
MISCELLANEOUS					
F1 (4-C)	YESAF01009		Fuse 7A (30mm)	1	
Z51	YEAL02010T		Neon Tube	1	
PL701 (1-B)	YEAL01078A		Pilot Lamp	1	
PL702, 703 (1-A) (1-B)	YEAL01110		Pilot Lamp	2	
CJ701 (2-B)	YEAE0708MXNB		8P Connector	1	
CN1 (3-B)	EMCQRE18B38V		20P Connector	1	
CN2 (3-C)	EMCQRH58B40V		20P Connector	1	
CN201 (2-C)	YEAEM2005SP		5P Connector	1	
CN401 (2-C)	YEAE0106WK		6P Connector	1	
CN601 (1-A)	YEAE0103IWK		3P Connector	1	
CN602 (1-A)	YEAE0105IWK		5P Connector	1	
CN603 (1-A)	YEAE0104IWK		4P Connector	1	
CN604 (1-B)	YEAE0103IWK		3P Connector	1	
CN605 (1-B)	YEAE0104IWK		4P Connector	1	
CN606 (1-B)	YEAE0103IWK		3P Connector	1	
CN701 (2-C) CN702 (2-C)	YEAE011976		20P Connector	2	
CNP201 (3-A)	YEAE011402		5P Connector	1	
1 (4-B)	YEFA031172		Upper Cover	1	
2 (2-A)	YEFE11085		Knob	1	
3 (2-A)	YEFE07432		Knob	1	
4 (2-A)	YEFE08327		Knob	1	
5 (1-A)	YEFE133126		Knob LOUD	1	
6 (2-A)	YEFC023636		Escutcheon Ass'y	1	
7 (1-C)	YEFA05542		Under Cover	1	
8 (2-B)	YEFA07285		Flont Plate	1	

MODEL CQ-D55VEG

Ref. No.	Part No.	Part Code	Part Name & Description	Pcs set	Remarks
9 (2-B)	YEFA09366AK		Side Plate (R)	1	
10 (3-B)	YEFA09360A		Side Plate (L)	1	
11 (3-C)	YEFF01702		Heat Shink	1	
12 (2-C)	YEFX0213266		Mounting Bracket	2	
13 (2-C)	YEFX0213323		Mounting Bracket	1	
14 (1-A) (1-B)	YEFK04404		Pilot Lamp Holder	2	
15 (2-B)	YEFK06515A		LCD Holder (A)	1	
16 (1-B)	YEFK06519		LCD Holder	1	
17 (1-C)	YEFV011438		Insulator	1	
18 (2-B)	YEFV021140A		Shade	1	
19 (1-A)(1-B) (1-C)	YEP0PT6465C0		PCB w / Component	1	NLA
20 ⊛	XTB3 + 8FFX		Screw	2	
21 (1-B)	YEFE133147		Button, (DW)	1	
22 ⊙	XTB3 + 6FFX		Screw	11	
23 (2-C)	YEABCR2032H4		Battery	1	
24 ★	YEJT03038		Screw	2	
25 (3-B)	YEFX0213347		Quick Release Bracket	1	
26 ☒	YEJV08036		Screw	4	
27 (1-A)	YEFC05515		Handle Cover	1	
28 (1-A)	YEFX0213304		Handle Ass'y	1	
29 (3-A)	YEFX0461396		Eject Lever	1	
30 (3-A)	YEFE133123		Button, EJECT	1	
31 (3-A)	YEFE133124		Button, FF	1	
32 (3-A)	YEFE133125		Button, REW	1	
33 (3-A)	YEFX0213268		Mounting Bracket for Deck	1	
34 ☆	YEJS06027		Screw	4	
35 ◈	YEJT03081		Screw	1	
37 (2-B)	YEP0PT5541B0		PCB w / Component, (PA751)	1	NLA
38 (2-B)	YEFA13864		Case	1	

EXPLODED VIEW MODEL CQ-D55VEG(UNIT)

■ Numbers in ○ are indicated REF. No. in the REPLACEMENT PARTS LIST.

■ The symbols next to the screws indicate as follows.

20	⊛	XTB3+8FFX	⊕Screw
22	⊙	XTB3+6FFX	⊕Screw
24	★	YEJT03038	⊕Screw
26	☒	YEJV08036	⊕Screw
34	☆	YEJS06027	⊕Screw
35	◈	YEJT03081	⊕Screw

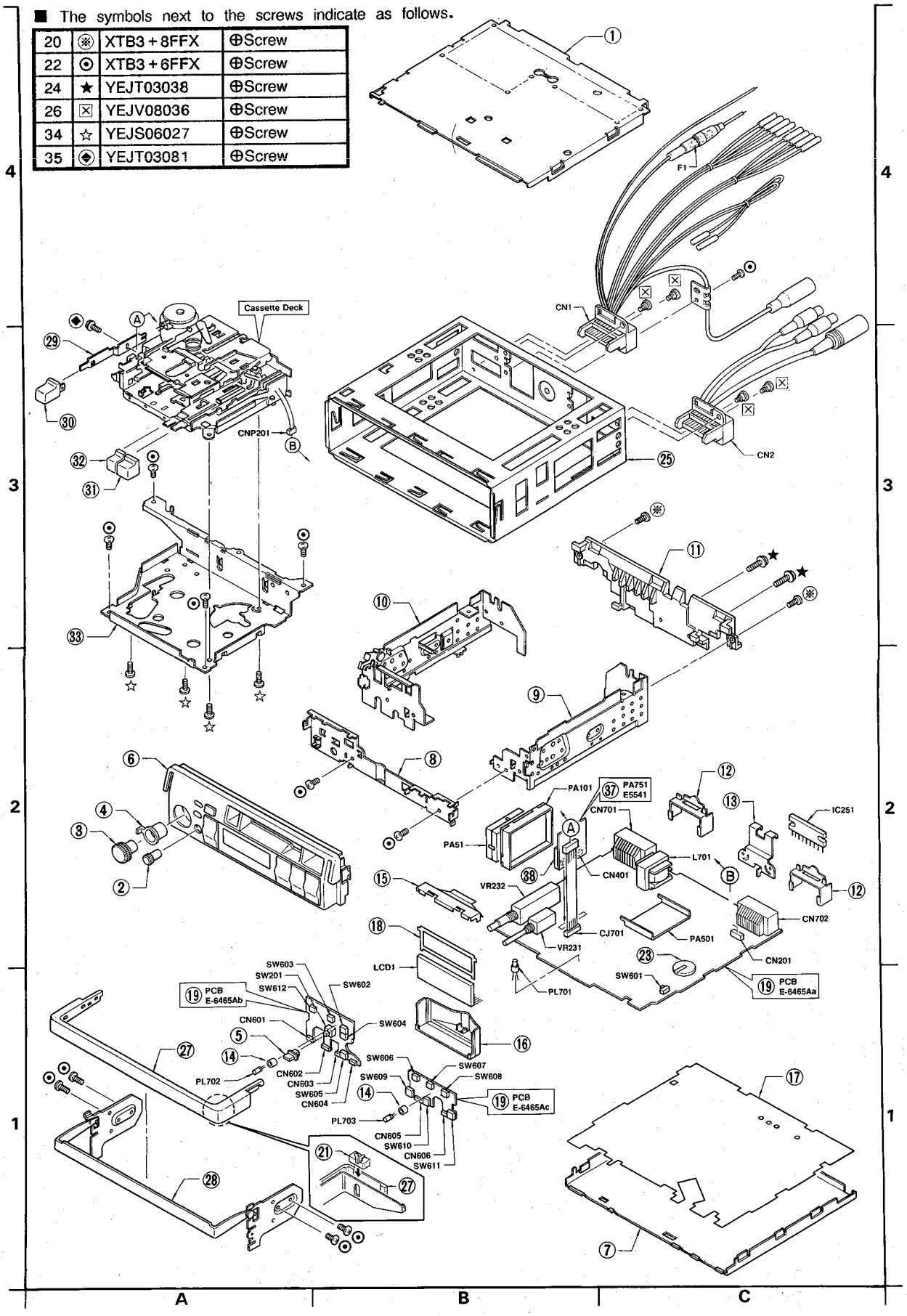

MODEL CQ-D55VEG

Ref. No.	Part No.	Part Code	Part Name & Description	Pcs set	Remarks
ICs & TRANSISTORs					
MAIN BLOCK					
PA51	ENV19282G1		FM Frond End	1	
PA101	YEAU03SKM05B		AM Tunner	1	
PA501	YEP0PTS346A0		PCB w/Component	1	
IC201	YEAMLA3161		IC	1	
IC221	YEAMPD4052T1		IC	1	
IC231	YEAMM5218AFE		IC	1	
IC251	YEAMTA8205AH		IC	1	
IC601	YEAM17010517		IC	1	
IC651	YEAM6500262		IC	1	
Q51	YEANC144EUTX		Transistor	1	
Q201	YEANC144EUTX		Transistor	1	
Q202	YEAN2SC2785		Transistor	1	
Q221	YEANRU201ETR		Transistor	1	
Q231	YEANC3661TA		Transistor	1	
Q301	YEANC144EUTX		Transistor	1	
Q302	YEAN2SC2785		Transistor	1	
Q321	YEANRU201ETR		Transistor	1	
Q331	YEANC3661TA		Transistor	1	
Q601	YEAN2SK536		Transistor	1	
Q602	YEANBA3L4Z		Transistor	1	
Q604	YEANBN3L4Z		Transistor	1	
Q611, Q612	YEANDTC144ST		Transistor	2	
Q630	YEANA124EKTX		Transistor	1	
Q631	YEANA812		Transistor	1	
Q632	YEANC144EUTX		Transistor	1	
Q633	YEANC144EUTX		Transistor	1	
Q634	YEANC144EUTX		Transistor	1	
Q701, 702	YEAN2SD1020		Transistor	2	
Q710	YEAN2SD2007		Transistor	1	
Q711 to 713	YEANB123YST		Transistor	3	

Ref. No.	Part No.	Part Code	Part Name & Description	Pcs set	Remarks
[E5541]					
IC401	YEAMTDA1579T		IC	1	
IC402	YEAMM5218AFE		IC	1	
DIODEs					
D101	YEADRD56JS3		Diode	1	
D501	YEADAN202UTX		Diode	1	
D502	MA151ATW		Diode	1	
D601	MA700		Diode	1	
D610	MA150		Diode	1	
D611 to 613	YEADDA114TX		Diode	3	
D614 to 617	MA165		Diode	4	
D620	MA150		Diode	1	
D630	MA151KTW		Diode	1	
D631	MA150		Diode	1	
D632	MA151KTW		Diode	1	
D634	MA165		Diode	1	
D651	MA165		Diode	1	
D701	YEADDSA3A2		Diode	1	
D702	YEADDSM1A2T7		Diode	1	
D703	YEADRD56JS3		Diode	1	
D704	MA4100LM		Diode	1	
D705	YEADRD56JS3		Diode	1	
D706	YEADRD51JS3T		Diode	1	
D707	MA700		Diode	1	
D710	YEADRD91EB2T		Diode	1	
D740	MA165		Diode	1	

Ref. No.	Part No.	Part Code	Part Name & Description	Pcs set	Remarks
			CAPACITORs		
C52	YECUS1H103KX		Ceramic, 0.01 MFD 50WV	1	
C53	ECEA1HKS010		Electrolytic AL, 1 MFD 50WV	1	
C54	YECUS1H103KX		Ceramic, 0.01 MFD 50WV	1	
C55	YECUS1H103KX		Ceramic, 0.01 MFD 50WV	1	
C56	YECUS1E104ZF		Ceramic, 0.1 MFD 25WV	1	
C58	YECUS1H103KX		Ceramic, 0.01 MFD 50WV	1	
C103	YECUS1H103KX		Ceramic, 0.01 MFD 50WV	1	
C104	ECEA1AKS101		Electrolytic AL, 100 MFD 10WV	1	
C105	YECUS1H103KX		Ceramic, 0.01 MFD 50WV	1	
C106	ECEA1HKS0R1		Electrolytic AL, 0.1 MFD 50WV	1	
C201	YECUS1H122KX		Ceramic, 0.0012 MFD 50WV	1	
C202	ECEA1HKS010		Electrolytic AL, 1 MFD 50WV	1	
C203	ECEA0JKS101		Electrolytic AL, 100 MFD 6.3WV	1	
C204	YECUS1H273KX		Ceramic, 0.027 MFD 50WV	1	
C205	YECUS1H183KX		Ceramic, 0.018 MFD 50WV	1	
C206	ECEA1VKS4R7		Electrolytic AL, 4.7 MFD 35WV	1	
C227	ECEA1HKS010		Electrolytic AL, 1 MFD 50WV	1	
C228	YECUS1E223KX		Ceramic, 0.022 MFD 25WV	1	
C229	YECUS1H102KX		Ceramic, 0.001 MFD 50WV	1	
C230	YECUS1E223KX		Ceramic, 0.022 MFD 25WV	1	
C231	YECUV1H331JM		Ceramic, 330PF 50WV	1	
C232	ECEA1HKS010		Electrolytic AL, 1MFD 50WV	1	
C235	YECUS1H472KX		Ceeramic, 0.0047MFD 50WV	1	
C236	ECEA1HKSR33		Electrolytic AL, 0.33MFD 50WV	1	
C237	ECEA1HKS010		Electrolytic AL, 1 MFD 50WV	1	
C238	ECEB1CK100B		Electrolytic AL, 10 MFD 16WV	1	
C239	YECUS1E104ZF		Ceramic, 0.1 MFD 25WV	1	
C240	ECEA1CKS100		Electrolytic AL, 10 MFD 16WV	1	
C241	ECEA1CKS100		Electrolytic AL, 10 MFD 16WV	1	
C251	ECEA1HKS2R2		Electrolytic AL, 2.2 MFD 50WV	1	

Ref. No.	Part No.	Part Code	Part Name & Description	Pcs set	Remarks
C252	YECUS1H102KX		Ceramic, 0.001 MFD 50WV	1	
C253	ECEA1CPK220		Electrolytic AL, 22 MFD 16WV	1	
C254	ECQV1H124JZ		Polyester, 0.12MFD 50WV	1	
C255	ECQV1H124JZ		Polyester, 0.12MFD 50WV	1	
C256	ECEA1EKS3R3		Electrolytic AL, 3.3MFD 25WV	1	
C260	ECEA1AU221		Electrolytic AL, 220MFD 10WV	1	
C301	YECUS1H122KX		Ceramic, 0.0012MFD 50WV	1	
C302	ECEA1HKS010		Electrolytic AL, 1MFD 50WV	1	
C303	ECEA0JKS101		Electrolytic AL, 100MFD 6.3WV	1	
C304	YECUS1H273KX		Ceramic, 0.027MFD 50WV	1	
C305	YECUS1H183KX		Ceramic, 0.018MFD 50WV	1	
C306	ECEA1VKS4R7		Electrolytic AL, 4.7MFD 35WV	1	
C327	ECEA1HKS010		Electrolytic AL, 1MFD 50WV	1	
C328	YECUS1E223KX		Ceramic, 0.022MFD 25WV	1	
C329	YECUS1H102KX		Ceramic, 0.001MFD 50WV	1	
C330	YECUS1E223KX		Ceramic, 0.022MFD 25WV	1	
C331	YECUS1H331JM		Ceramic, 330PF 50WV	1	
C332	ECEA1HKS010		Electrolytic AL, 1MFD 50WV	1	
C335	YECUS1H472KX		Ceramic, 0.0047MFD 50WV	1	
C336	ECEA1HKSR33		Electrolytic AL, 0.33MFD 50WV	1	
C337	ECEA1HKS010		Electrolytic AL, 1MFD 50WV	1	
C338	ECEB1CK100B		Electrolytic AL, 10MFD 16WV	1	
C339	YECUS1E104ZF		Ceramic, 0.1MFD 25WV	1	
C340	ECEA1CKS100		Electrolytic AL, 10MFD 16WV	1	
C341	ECEA1CKS100		Electrolytic AL, 10MFD 16WV	1	
C351	ECEA1HKS2R2		Electrolytic AL, 2.2MFD 50WV	1	
C352	YECUS1H102KX		Ceramic, 0.001MFD 50WV	1	
C353	ECEA1AKS220		Electrolytic AL, 22MFD 10WV	1	
C354	ECQV1H124JZ		Polyester. 0.12MFD 50WV	1	
C355	ECQV1H124JZ		Polyester. 0.12MFD 50WV	1	
C356	ECEA1EKS3R3		Electrolytic AL, 3.3MFD 25WV	1	
C501	ECEA1AKS101		Electrolytic AL, 100MFD 10WV	1	
C502	YECUS1H103KX		Ceramic, 0.01MFD 50WV	1	
C503	YECUS1E104ZF		Ceramic, 0.1MFD 25WV	1	

MODEL CQ-D55VEG

Ref. No.	Part No.	Part Code	Part Name & Description	Pcs set	Remarks
C504	YECUV1H560JM		Ceramic, 56PF 50WV	1	
C505	YECUS1H103KX		Ceramic, 0.01MFD 50WV	1	
C506	YECUS1E223KX		Ceramic, 0.022MFD 25WV	1	
C507	YECUS1H103KX		Ceramic, 0.01MFD 50WV	1	
C521	YECUS1E273KX		Ceramic, 0.027MFD 25WV	1	
C531	YECUS1E273KX		Ceramic 0.027MFD 25WV	1	
C601	YECUS1E104ZF		Ceramic 0.1MFD 25WV	1	
C602	YECUV1H104ZF		Ceramic 0.1MFD 25WV	1	
C603	ECEA1AKS221		Electorlytic AL, 220MFD 10WV	1	
C604	ECEA1AKS221		Electorlytic AL, 220MFD 10WV	1	
C605	YECUS1H220JM		Ceramic, 22PF 50WV	1	
C606	YECUS1H220JM		Ceramic, 22PF 50WV	1	
C607	YECUS1H103KX		Ceramic 0.01MFD 50WV	1	
C608	ECEA1VKS4R7		Electrolytic AL, 4.7MFD 35WV	1	
C609	ECEA1AKS101		Electrolytic AL, 100MFD 10WV	1	
C610	YECUS1H103KX		Ceramic, 0.01MFD 50WV	1	
C612	YECUS1H103KX		Ceramic, 0.01MFD 50WV	1	
C620	YECUS1H103KX		Ceramic, 0.01MFD 50WV	1	
C630	ECEA0JKS101		Electrolytic AL, 100MFD 6.3WV	1	
C631	ECEA0JKS470		Electrolytic AL, 47MFD 6.3WV	1	
C632	ECEA1CKS330		Electrolytic AL, 33MFD 16WV	1	
C633	YECUS1H103KX		Ceramic, 0.01MFD 50WV	1	
C670	YECUS1H103KX		Ceramic, 0.01MFD 50WV	1	
C671	YECUS1H103KX		Ceramic, 0.01MFD 50WV	1	
C701	ECEA1CPU222		Electrolytic AL, 2200MFD 16WV	1	
C702	YECUS1H103KX		Ceramic, 0.01MFD 50WV	1	
C703	ECEA1CKS100		Electrolytic AL, 10MFD 16WV	1	
C704	ECEA1AKS470		Electrolytic AL, 47MFD 10WV	1	
C705	ECEA1CKS100		Electrolytic AL, 10MFD 16WV	1	
C707	ECEA1CU102Y		Electrolytic AL, 1000MFD 16WV	1	
C710	ECEA1AKS101		Electrolytic AL, 100MFD 10WV	1	
C711	ECEA1AKS101		Electrolytic AL, 100MFD 10WV	1	
C712	YECUS1H103KX		Ceramic, 0.01MFD 50WV	1	
C713	YECUV2A103KX		Ceramic 0.01MFD 100WV	1	

Ref. No.	Part No.	Part Code	Part Name & Description	Pcs set	Remarks
C730	ECEA1CKS101		Electrolytic AL, 100MFD 16WV	1	
C731	ECEA1AKS101		Electrolytic AL, 100MFD 10WV	1	
C735	YECUS1H103KX		Ceramic, 0.01MFD 50WV	1	
C740	ECEA1AKS101		Electrolytic AL, 100MFD 10WV	1	
C741	YECUV2A103KX		Ceramic, 0.01MFD 100WV	1	
C742	ECEA1AKS101		Electrolytic AL, 100MFD 10WV	1	
C743	ECEA1AKS101		Electrolytic AL, 100MFD 10WV	1	
CS701	YECCL55S222T		Shilde through capacitor	1	
[E5541]					
C401, 402	ECQV1H683JZ		Polyester, 0.068MFD 50WV	2	
C403	ECEA1EKS4R7		Electrolytic AL, 4.7MFD 25WV	1	
C404, 405	ECQV1H683JZ		Polyester, 0.068MFD 50WV	2	
C406	YECUS1C563KX		Ceramic, 0.056MFD 16WV	1	
C407	YECUS1E104ZF		Ceramic, 0.1MFD 25WV	1	
C408	YECUS1C563KX		Ceramic, 0.056MFD 16WV	1	
C409, 410	ECQV1H683JZ		Polyester, 0.068MFD 50WV	2	
RESISTORs					
[E6465]					
R51	ERJ6GEYJ223		Metal Coat, 22K ohms 0.1W	1	
R52	ERJ6GEYJ223		Metal Coat, 22k ohms 0.1W	1	
R53	ERJ6GEYJ223		Metal Coat, 22K ohms 0.1W	1	
R54	ERJ6GEYJ271		Metal Coat, 270 ohms 0.1W	1	
R55	ERD25TJ151		Carbon, 150 ohms 0.25W	1	
R56	ERJ6GEYJ331		Metal Coat, 330 ohms 0.1W	1	
R57	ERDS2TJ151		Carbon, 150 ohms 0.25W	1	
R102	ERJ6GEYJ103		Metal Coat, 10K ohms 0.1W	1	

Ref. No.	Part No.	Part Code	Part Name & Description	Pcs set	Remarks
R103	ERJ8GCYJ103		Metal Coat, 10Kohms 0.13W	1	
R104	ERJ6GEYJ821		Metal Coat, 820 ohms 0.1W	1	
R105	ERJ8GCYJ473		Metal Coat, 47K ohms 0.13W	1	
R106	ERJ6GEYJ473		Metal Coat, 47K ohms 0.1W	1	
R110	ERJ6GEYJ472		Metal Coat, 4.7K ohms 0.1W	1	
R111	ERJ6GEYJ472		Metal Coat, 4.7K ohms 0.1W	1	
R201	ERJ6GEYJ333		Metal Coat, 33K ohms 0.1W	1	
R202	ERJ6GEYJ472		Metal Coat, 4.7K ohms 0.1W	1	
R203	ERJ6GEYJ270		Metal Coat, 27 ohms 0.1W	1	
R204	ERJ6GEYJ124		Metal Coat, 120K ohms 0.1W	1	
R205	ERDS2TJ332		Carbon, 3.3K ohms 0.25W	1	
R206	ERJ6GEYJ472		Metal Coat, 4.7K ohms 0.1W	1	
R207	ERJ6GEYJ104		Metal Coat, 100K ohms 0.1W	1	
R208	ERJ8GCYJ683		Metal Coat, 68K ohms 0.13W	1	
R209	ERJ8GCYJ122		Metal Coat, 1.2K ohms 0.13W	1	
R225	ERJ8GCYJ223		Metal Coat, 22K ohms 0.13W	1	
R226	ERJ8GCYJ183		Metal Coat, 18K ohms 0.13W	1	
R227	ERJ6GEYJ682		Metal Coat, 6.8K ohms 0.1W	1	
R228	ERJ6GEYJ223		Metal Coat, 22K ohms 0.1W	1	
R229	ERJ8GCYJ183		Metal Coat, 18K ohms 0.13W	1	
R231	ERJ6GEYJ221		Metal Coat, 220 ohms 0.1W	1	
R235	ERJ6GEYJ105		Metal Coat, 1M ohms 0.1W	1	
R236	ERJ6GEYJ153		Metal Coat, 15K ohms 0.1W	1	
R237	ERJ6GEYJ152		Metal Coat, 1.5K ohms 0.1W	1	
R238	ERJ6GEYJ332		Metal Coat, 3.3K ohms 0.1W	1	
R239	ERJ6GEYJ153		Metal Coat, 15K ohms 0.1W	1	
R240	ERJ6GEYJ122		Metal Coat, 1.2K ohms 0.1W	1	
R241	ERJ6GEYJ682		Metal Coat, 6.8K ohms 0.1W	1	
R242	ERJ6GEYJ222		Metal Coat, 2.2K ohms 0.1W	1	
R243	ERJ6GEYJ153		Metal Coat, 15K ohms 0.1W	1	
R244	ERJ8GCYJ562		Metal Coat, 5.6K ohms 0.13W	1	
R245	ERJ6GEYJ681		Metal Coat, 680 ohms 0.1W	1	
R246	ERJ6GEYJ272		Metal Coat, 2.7K ohms 0.1W	1	
R247	ERJ6GEYJ222		Metal Coat, 2.2K ohms 0.1W	1	

Ref. No.	Part No.	Part Code	Part Name & Description	Pcs set	Remarks
R252	ERJ6GEYJ391		Metal Coat, 390 ohms 0.1W	1	
R253	ERJ8GCYJ2R2		Metal Coat, 2.2 ohms 0.13W	1	
R254	ERJ8GCYJ2R2		Metal Coat, 2.2 ohms 0.13W	1	
R260	ERJ6GEYJ222		Metal Coat, 2.2K ohms 0.1W	1	
R301	ERJ6GEYJ333		Metal Coat, 33k ohma 0.1W	1	
R302	ERJ6GEYJ472		Metal Coat, 4.7K ohms 0.1W	1	
R303	ERJ6GEYJ270		Metal Coat, 27 ohma 0.1W	1	
R304	ERJ6GEYJ124		Metal Coat, 120K ohma 0.1W	1	
R305	ERJ8GCYJ332		Metal Coat, 3.3K ohms 0.13W	1	
R306	ERJ6GEYJ472		Metal Coat, 4.7K ohms 0.1W	1	
R307	ERJ6GEYJ104		Metal Coat, 100K ohma 0.1W	1	
R308	ERJ8GCYJ683		Metal Coat, 68K ohms 0.13W	1	
R309	ERJ8GCYJ122		Metal Coat, 1.2K ohms 0.13W	1	
R325	ERJ6GEYJ223		Metal Coat, 22K ohms 0.1W	1	
R326	ERJ6GEYJ183		Metal Coat, 18K ohms 0.1W	1	
R327	ERJ6GEYJ682		Metal Coat, 6.8K ohms 0.1W	1	
R328	ERJ8GCYJ223		Metal Coat, 22K ohms 0.13W	1	
R329	ERJ6GEYJ183		Metal Coat, 18K ohms 0.1W	1	
R331	ERJ8GCYJ221		Metal Coat, 220 ohms 0.13W	1	
R335	ERJ6GEYJ105		Metal Coat, 1M ohms 0.1W	1	
R336	ERJ6GEYJ153		Metal Coat, 15K ohms 0.1W	1	
R337	ERJ6GEYJ152		Metal Coat, 1.5K ohms 0.1W	1	
R338	ERJ6GEYJ332		Metal Coat, 3.3K ohms 0.1W	1	
R339	ERJ8GCYJ153		Metal Coat, 15K ohms 0.13W	1	
R340	ERJ6GEYJ122		Metal Coat, 1.2K ohms 0.1W	1	
R341	ERJ6GEYJ682		Metal Coat, 6.8K ohms 0.1W	1	
R342	ERJ6GEYJ222		Metal Coat, 2.2K ohms 0.1W	1	
R343	ERJ6GEYJ153		Metal Coat, 15K ohms 0.1W	1	
R344	ERJ6GEYJ562		Metal Coat, 5.6K ohms 0.1W	1	
R345	ERJ6GEYJ681		Metal Coat, 680 ohms 0.1W	1	
R346	ERJ6GEYJ272		Metal Coat, 2.7K ohms 0.1W	1	
R347	ERJ6GEYJ222		Metal Coat, 2.2K ohms 0.1W	1	
R352	ERJ8GCYJ391		Metal Coat, 390 ohms 0.13W	1	
R353	ERJ8GCYJ2R2		Metal Coat, 2.2 ohms 0.13W	1	

MODEL CQ-D55VEG

Ref. No.	Part No.	Part Code	Part Name & Description	Pcs set	Remarks
R354	ERJ8GCYJ2R2		Metal Coat, 2.2 ohms 0.13W	1	
R360	ERJ6GEYJ222		Metal Coat, 2.2K ohms 0.1W	1	
R501	ERJ6GEYJ273		Metal Coat, 27K ohms 0.1W	1	
R502	ERJ8GCYJ104		Metal Coat, 100K ohms 0.13W	1	
R503	ERJ6GEYJ103		Metal Coat, 10K ohms 0.1W	1	
R504	ERJ6GEYJ153		Metal Coat, 15K ohms 0.1W	1	
R505	ERJ8GCYJ103		Metal Coat, 10K ohms 0.13W	1	
R506	ERJ6GEYJ224		Metal Coat, 220K ohms 0.1W	1	
R507	ERJ6GEYJ104		Metal Coat, 100K ohms 0.1W	1	
R508	ERJ6GEYJ393		Metal Coat, 39K ohms 0.1W	1	
R509	ERJ6GEYJ104		Metal Coat, 100K ohms 0.1W	1	
R512	ERJ6GEYJ223		Metal Coat, 22K ohms 0.1W	1	
R601	ERJ8GCYJ332		Metal Coat, 3.3K ohms 0.13W	1	
R602, 603	ERJ6GEYJ152		Metal Coat, 1.5K ohms 0.1W	2	
R604	ERJ6GEYJ152		Metal Coat, 1.5K ohms 0.1W	1	
R605	ERJ8GCYJ471		Metal Coat, 470 ohms 0.13W	1	
R606	ERJ6GEYJ473		Metal Coat, 47K ohms 0.1W	1	
R607	ERJ6GEYJ684		Metal Coat, 680K ohms 0.1W	1	
R608	ERJ8GCYJ223		Metal Coat, 22K ohms 0.13W	1	
R609	ERJ6GEYJ473		Metal Coat, 47K ohms 0.1W	1	
R612	ERJ6GEYJ473		Metal Coat, 47K ohms 0.1W	1	
R613	ERDS2TJ103		Carbon, 10K ohms 0.25W	1	
R620	ERJ6GEYJ104		Metal Coat, 100K ohms 0.1W	1	
R621	ERJ6GEYJ104		Metal Coat, 100K ohms 0.1W	1	
R622	ERJ6GEYJ104		Metal Coat, 100K ohms 0.1W	1	
R623	ERJ6GEYJ103		Metal Coat, 10K ohms 0.1W	1	
R624	ERJ6GEYJ103		Metal Coat, 10K ohms 0.1W	1	
R625	ERJ6GEYJ103		Metal Coat, 10K ohms 0.1W	1	
R626	ERJ6GEYJ103		Metal Coat, 10K ohms 0.1W	1	
R630	ERJ8GCYJ103		Metal Coat, 10K ohms 0.13W	1	
R631	ERJ6GEYJ102		Metal Coat, 1K ohms 0.1W	1	
R632	ERJ6GEYJ103		Metal Coat, 10K ohms 0.1W	1	
R633	ERJ8GCYJ470		Metal Coat, 47 ohms 0.13W	1	
R634	ERJ6GEYJ562		Metal Coat, 5.6K ohms 0.1W	1	

Ref. No.	Part No.	Part Code	Part Name & Description	Pcs set	Remarks
R635	ERJ8GCYJ102		Metal Coat, 1K ohms 0.13W	1	
R636	ERJ8GCYJ103		Metal Coat, 10K ohms 0.13W	1	
R637	ERJ6GEYJ473		Metal Coat, 47K ohms 0.1W	1	
R655	ERJ6GEYJ104		Metal Coat, 100K ohms 0.1W	1	
R656	ERJ6GEYJ473		Metal Coat, 47K ohms 0.1W	1	
R674	ERJ6GEYJ473		Metal Coat, 47K ohms 0.1W	1	
R675	ERJ6GEYJ473		Metal Coat, 47K ohms 0.1W	1	
R678	ERDS2TJ472		Carbon, 4.7K ohms 0.25W	1	
R680	ERJ6GEYJ473		Metal Coat, 47K ohms 0.1W	1	
R681	ERJ6GEYJ473		Metal Coat, 47K ohms 0.1W	1	
R702	ERDS2TJ560		Carbon, 56 ohms 0.25W	1	
R703	ERDS2TJ103		Carbon, 10K ohms 0.25W	1	
R704	ERDS2TJ181		Carbon, 180 ohms 0.25W	1	
R705	ERDS2TJ560		Carbon, 56 ohms 0.25W	1	
R706	ERDS2TJ561		Carbon, 560 ohms 0.25W	1	
R707	ERJ8GCYJ823		Metal Coat, 82K ohms 0.13W	1	
R708	ERD25FJ4R7		Carbon, 4.7 ohms 0.25W	1	
R710	ERD25FJ3R3		Carbon, 3.3 ohms 0.25W	1	
R711	ERDS2TJ471		Carbon, 470 ohms 0.25W	1	
R730	ERD25FJ2R7		Carbon, 2.7 ohms 0.25W	1	
R735	ERJ6GEYJ332		Metal Coat, 3.3K ohms 0.1W	1	
R736	ERJ6GEYJ682		Metal Coat, 6.8K ohms 0.1W	1	
R740	ERJ6GEYJ472		Metal Coat, 4.7K ohms 0.1W	1	
R741	ERJ6GEYJ562		Metal Coat, 5.6K ohms 0.1W	1	
R742	ERJ8GCYJ392		Metal Coat, 3.9K ohms 0.13W	1	
R743	ERJ6GEYJ632		Metal Coat, 6.8K ohms 0.1W	1	
R751	ERJ6GEYJ153		Metal Coat, 15K ohms 0.1W	1	
R752	ERJ6GEYJ473		Metal Coat, 47K ohms 0.1W	1	
R753	ERJ6GEYJ473		Metal Coat, 47K ohms 0.1W	1	
J240	ERJ6GEYJ103		Metal Coat, 10K ohms 0.1W	1	
C14	ERJ8GCYJ103		Metal Coat, 10K ohms 0.13W	1	

Ref. No.	Part No.	Part Code	Part Name & Description	Pcs set	Remarks
[E5541]			**VF BLOCK**		
R401	ERJ6GEYJ473		Metal Coat, 47K ohms 0.1W	1	
R402	ERJ6GEYJ394		Metal Coat, 390Kohms 0.1W	1	
R403	ERJ6GEYJ563		Metal Coat, 56K ohms 0.1W	1	
R404	ERJ6GEYJ683		Metal Coat, 68K ohms 0.1W	1	
R405	ER0S2TKF5110		Carbon, 511 ohms 0.25W	1	
R406	ERJ6GEYJ104		Metal Coat, 100K ohms 0.1W	1	
R407	ER0S2TKF6813		Carbon, 681K ohms 0.25W	1	
R408	ERJ6GEYJ393		Metal Coat, 39K ohms 0.1W	1	
R409	ERJ6GEYJ224		Metal Coat, 220K ohms 0.1W	1	
R410	ERJ6GEYJ472		Metal Coat, 4.7K ohms 0.1W	1	
R411	ERJ6GEYJ124		Metal Coat, 120K ohms 0.1W	1	
R412	ERJ6GEYJ223		Metal Coat, 22K ohms 0.1W	1	
R413	ERJ6GEYJ394		Metal Coat, 390K ohms 0.1W	1	
R414	ERJ6GEYJ103		Metal Coat, 10K ohms 0.1W	1	
R415	ERJ6GEYJ473		Metal Coat, 47K ohms 0.1W	1	
R416	ERJ6GEYJ184		Metal Coat, 180K ohms 0.1W	1	
R417	ERJ6GEYJ183		Metal Coat, 18K ohms 0.1W	1	
			SWITCHEs		
SW201	ESB64501		Loudness	1	
SW601	YEAS07169		Battery Selector	1	
SW602 to 612	EVQ21505R		Preset	11	
			VARIABLE RESISTORs		
VR231	EVUSLA031B15			1	
VR232	EVUY3RS01251			1	
VR502	EVNDXAA00B24		20K ohms	1	
VR503	EVNDXAA00B53		5K ohms	1	

Ref. No.	Part No.	Part Code	Part Name & Description	Pcs set	Remarks
			CRYSTAL		
XL601	YEXL49U0450T		Crystal	1	
			COILs		
L101	YELT02C4R7KT		RF Coil	1	
L401	YELL07S175		OSC Coil	1	
L601	YELT02C101KT		RF Coil	1	
L620	YELT02C101KT		RF Coil	1	
L701	YETQ026F115		Choke Coil	1	
			LCD		
LCD1	YEXDCM1018		LCD	1	
			PRINTING		
	YEFM281860		Opereting Instruction	1	
			INSTALLATION PARTS		
2	YEFG04019		Rear Supprt Strap	1	
3	XVG5C25FX		Hex, Bolt (5mmφ×25mm)	1	
4	XNG5AFX		Hex, Nut (5mmφ)	2	
5	XWA5BFX		Spring Washer (5mmφ)	2	
6	XWG5FX		Plain Washer (5mmφ)	2	
7	XWC5CFX		Toothed Lock Washer (5mmφ)	1	
8	YEJV01060		Mounting Bolt (5mmφ)	1	

MODELS CQ-D50VEG/CQ-D55VEG

TAPE PLAYER PARTS

TN-707H-145
440
91.7.29

Ref. No.	Part No.	Part Code	Part Name & Description	Pcs set	Remarks
1 (3-B)	YEFA011365		Chassis Ass'y	1	
2 (2-C)	YEP0FX1479		Head Panel Ass'y	1	
3 (2-C)	YEFX0051533		Head Spring	1	
4 (2-C)	YEAHMRKF019		Head Ass'y w/PCB	1	
5 (3-B)	YEFX249359		Pinch Roller Arm (F) Ass'y	1	
6 (2-A)	YEFX249360		Pinch Roller Arm (R) Ass'y	1	
7 (2-A)	YEP0FX1480		Main Gear Plate Ass'y	1	
8 (3-A)	YEAP5818		PCB for Switch	1	
9 (2-C)	YEAS07161		Switch	1	
10 (3-A)	YEAS07162		Switch	1	
11 (3-B)	YEAS08035		Switch	1	
12 (3-B)	YEAE012017		Connector	1	
13 (4-B)	YEP0FX1481		Cassette Case Ass'y	1	
14 (4-B)	YEFX005973		P.E Spring	1	
16 (2-A)	YEFX218255		H.P Roller (A)	1	
17 (2-A)	YEFX218256		H.P Roller (B)	1	
18 (2-A)	YEFX0461254		C.H Push Plate	1	
19 (2-A)	YEFX0051535		Push Lever Spring	1	
20 (3-A)	YEFX0051534		C.H Spring	1	
21 (3-A)	YEFX0461255		Push Lever	1	
22 (3-C)	YEP0FX1860		FR Lever Ass'y	1	
24 (2-B)	YEFX0461256		Main Plate	1	
25 (2-B)	YEFX0051536		M.S Spring	1	
26 (2-C)	YEFX0051537		H.S Spring	1	
27 (2-B)	YEFX0461258		FR Solenoid Plate	1	
28 (3-B)	YEAK01021		Motor Ass'y (1940-11-304)	1	
29 (2-A)	YEJS06129		Collar Screw (W)	1	
30 (2-B)	YEFX0461861		FR Working Plate Ass'y	1	
31 (2-B)	YEFX0051757		FR Spring	1	
32 (2-B)	YEFX249364		H.P Return Arm	1	
33 (1-B)	YEFX213198		Flywheel Ass'y	2	
34 (1-B)	YEFR03074		Main Belt	1	

Ref. No.	Part No.	Part Code	Part Name & Description	Pcs set	Remarks
35 (3-C)	YEFX0051542		T.A Spring (C)	1	
36 (2-A)	YEFX0051539		P.P Spring	1	
37 (3-B)	YEFX003510		Main Gear	1	
38 (3-B)	YEFX026120		Middled Pulley	1	
39 (3-A)	YEFX0051540		Head Panel Spring	1	
40 (3-C)	YEFX249361		Trigger Arm (C)	1	
41 (3-C)	YEJS06128		Collar Screw (T)	1	
42 (2-A)	YEFX249362		H.P Push Arm	1	
43 (3-C)	YEFX249363		Seesaw Working Plate	1	
44 (4-A)	YEFX0051541		Power Switch Spring	1	
45 (2-C)	YEJT03117		Screw Tapping 2mm×4	1	
46	YEFX014052		Snap Ring	2	
47	YEJT03118		Screw Tapping 2mm×3mm	4	
48(2-B)(3-A)	YEJE01027		E-Ring 2mm	2	
49 (2-B)	YEJS06130		Screw 2mm×3mm	2	
50(1-B)(2-B)	YEJW05102		Washer 2.1mm×5mm×0.13mm	2	
51 (3-B)	YEJW05103		Washer 1.85×3.2×0.2	2	
52 (3-B)	YEJW05104		Washer 1.5×3.2×0.5	2	
53 (3-B)	YEFX014053		Washer 1.2×3×0.25	1	
54 (3-B)	YEJS06131		Screw Tamas 2.5mm×4mm	1	
55 (2-C)	YEJS06132		Screw	2	
56 (4-C)	YEJW05122		Washer	1	

EXPLODED VIEW MODEL CQ-D50VEG/D55VEG(DECK)
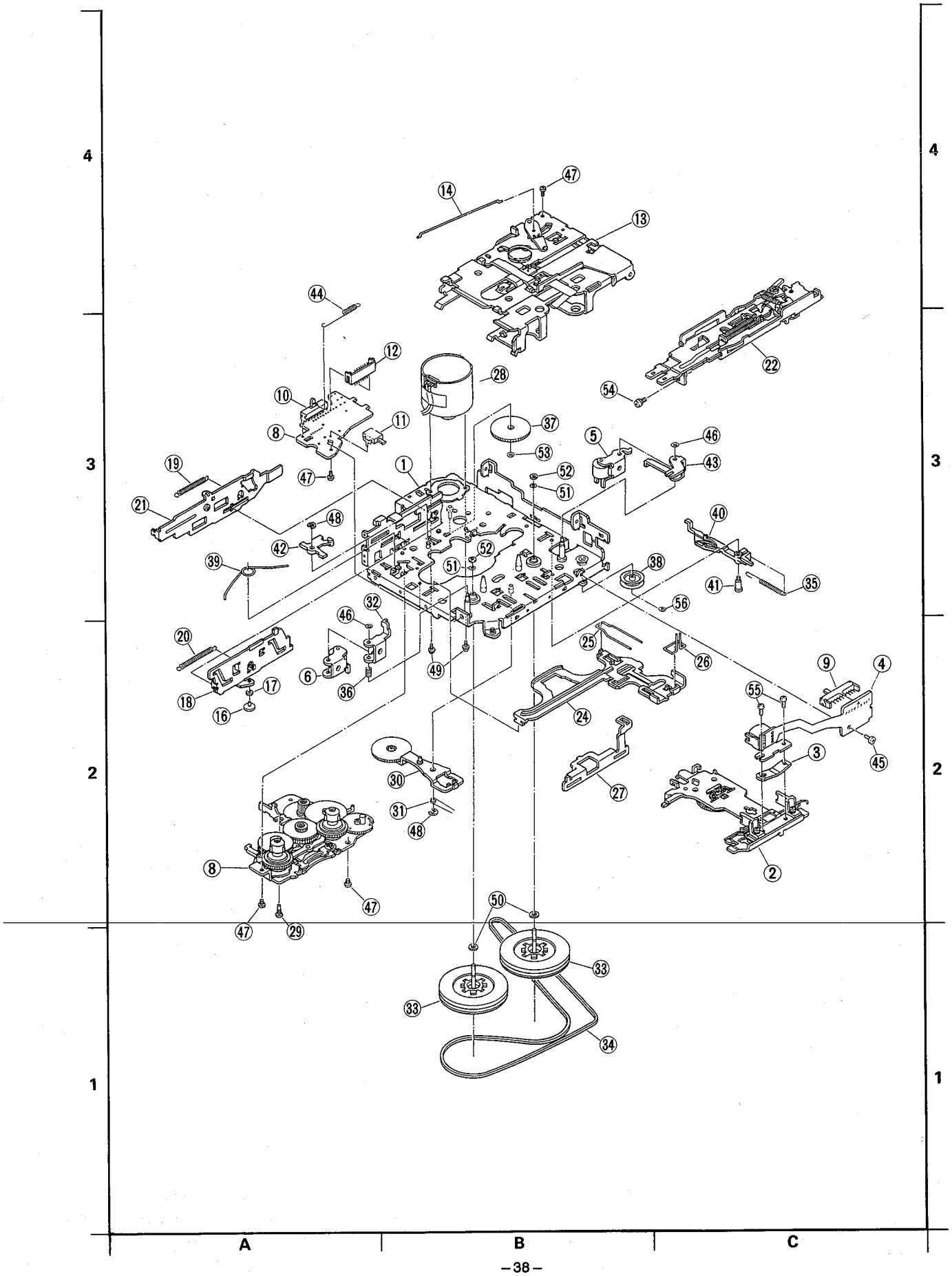
■ Numbers in ○ are indicated REF. No. in the REPLACEMENT PARTS LIST.